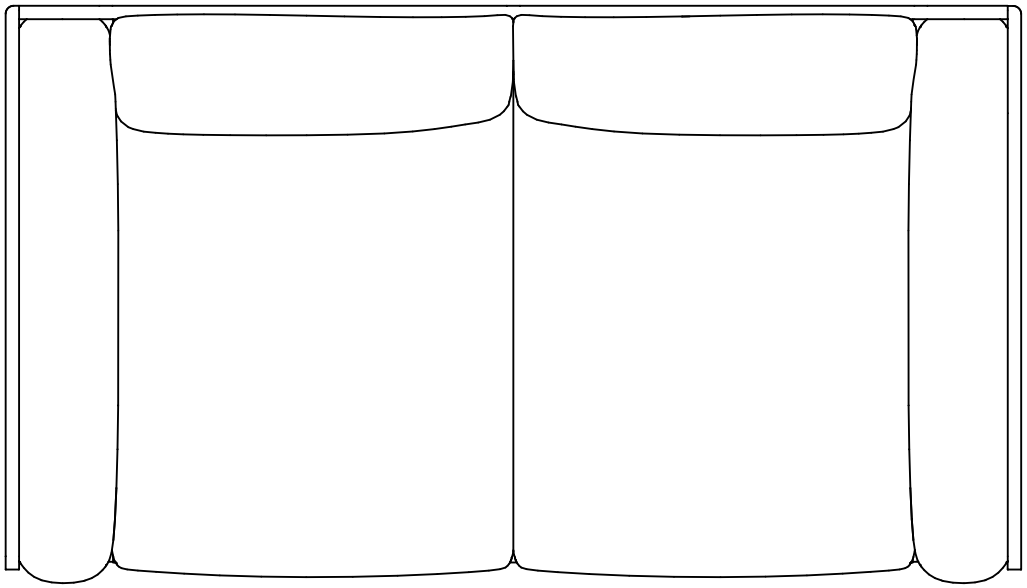

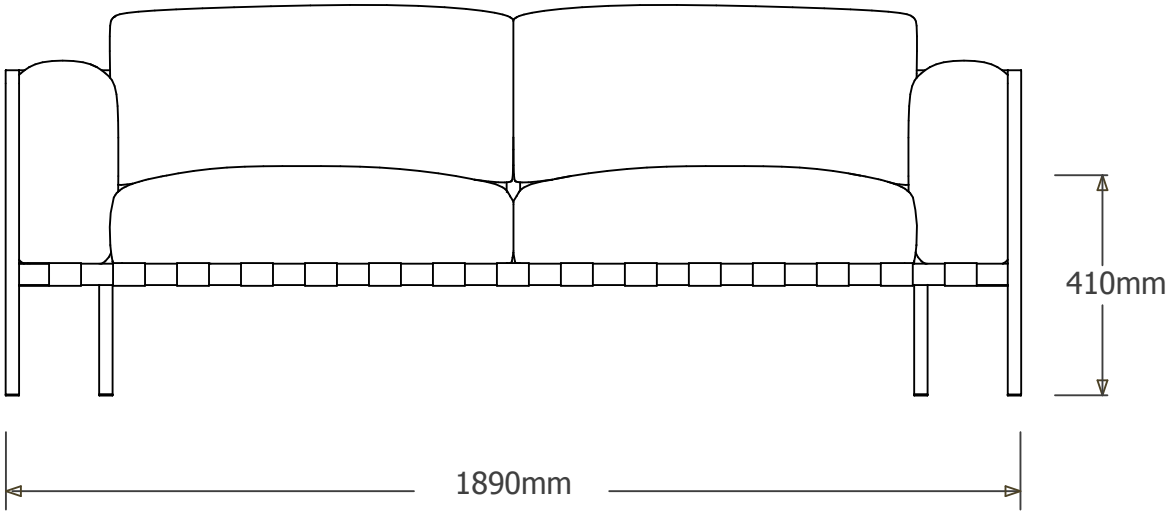
410mm
1890mm

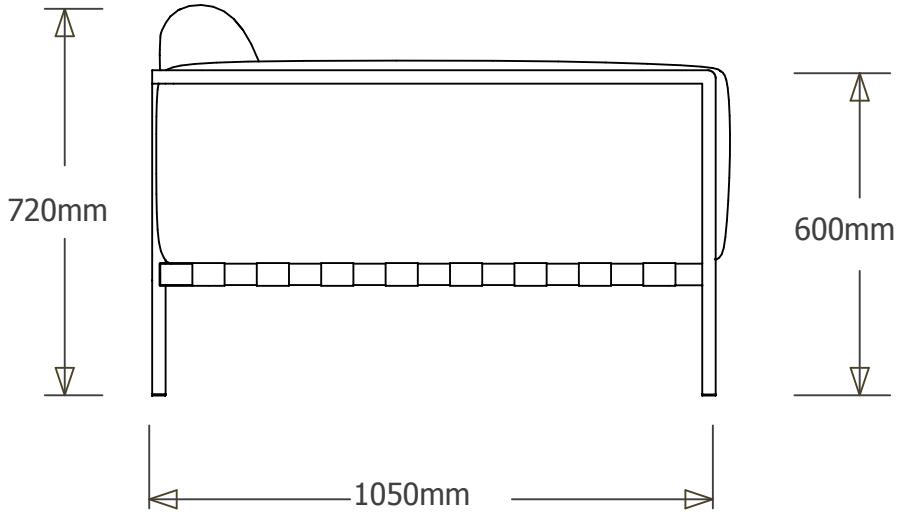
720mm
600mm
1050mm

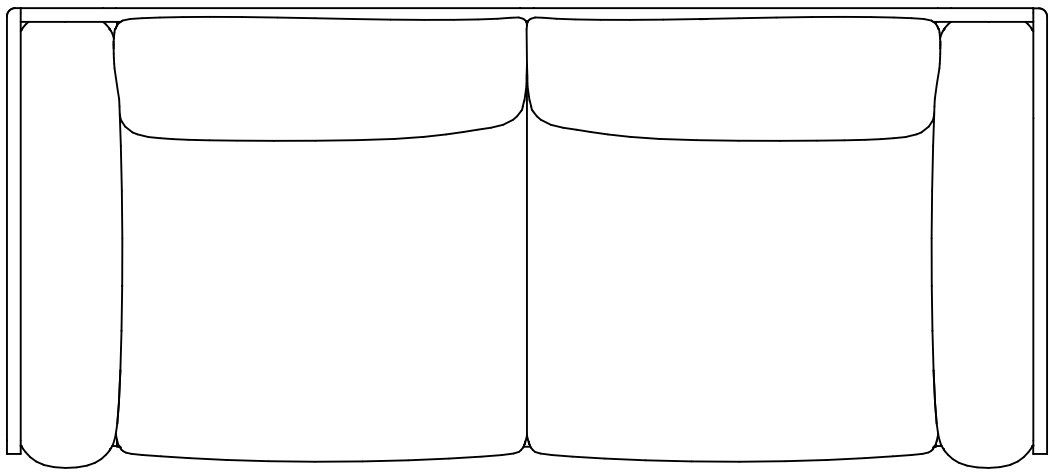

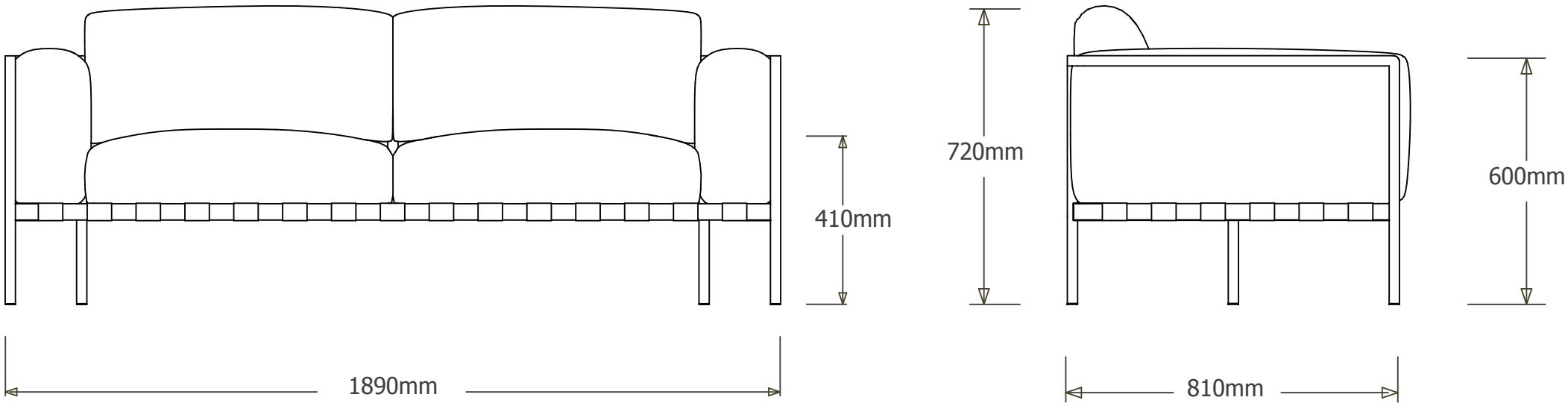
410mm
720mm
600mm
1890mm
810mm

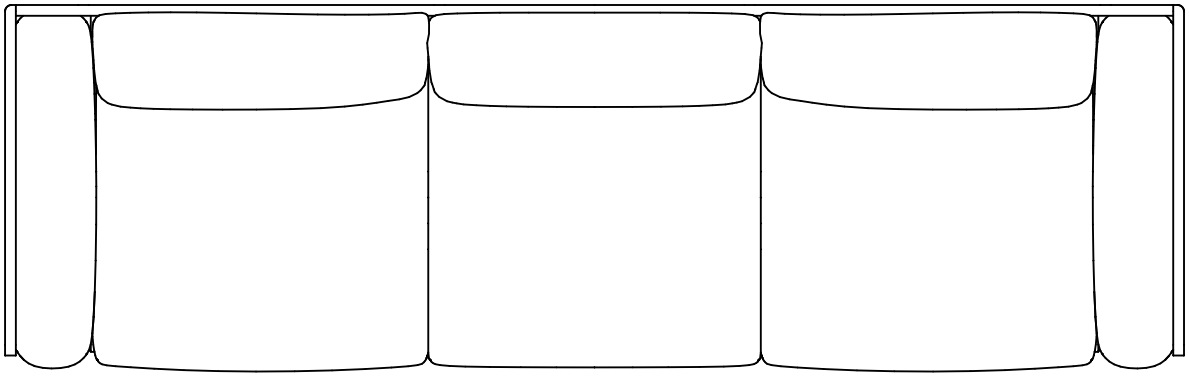

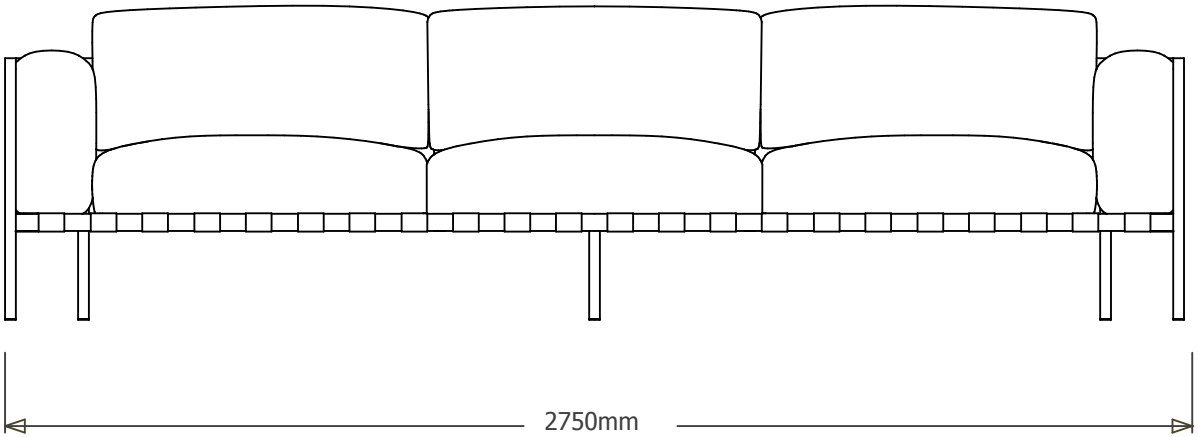
410mm
720mm
2750mm

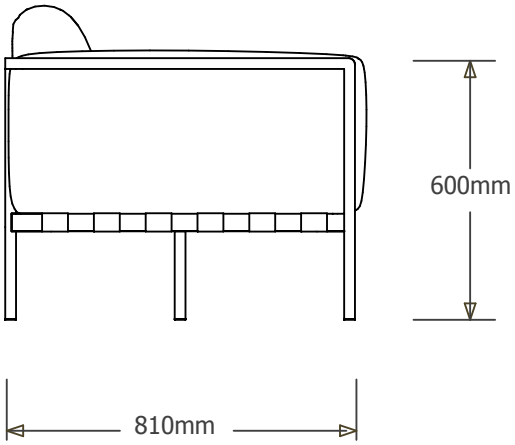
600mm
810mm

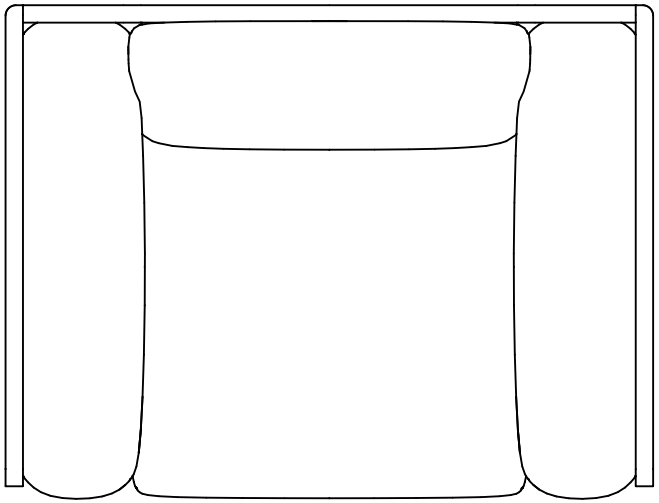

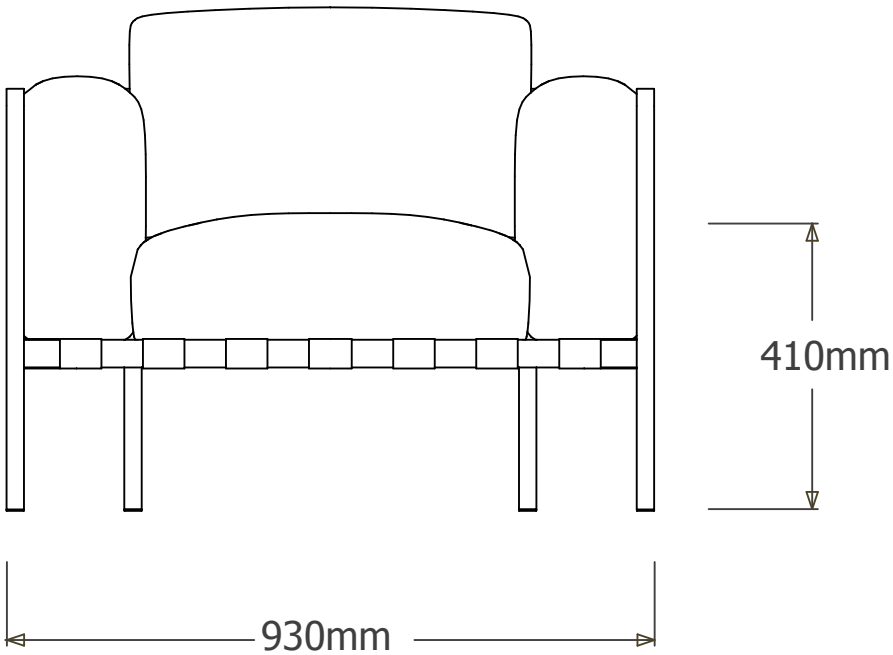
410mm
930mm

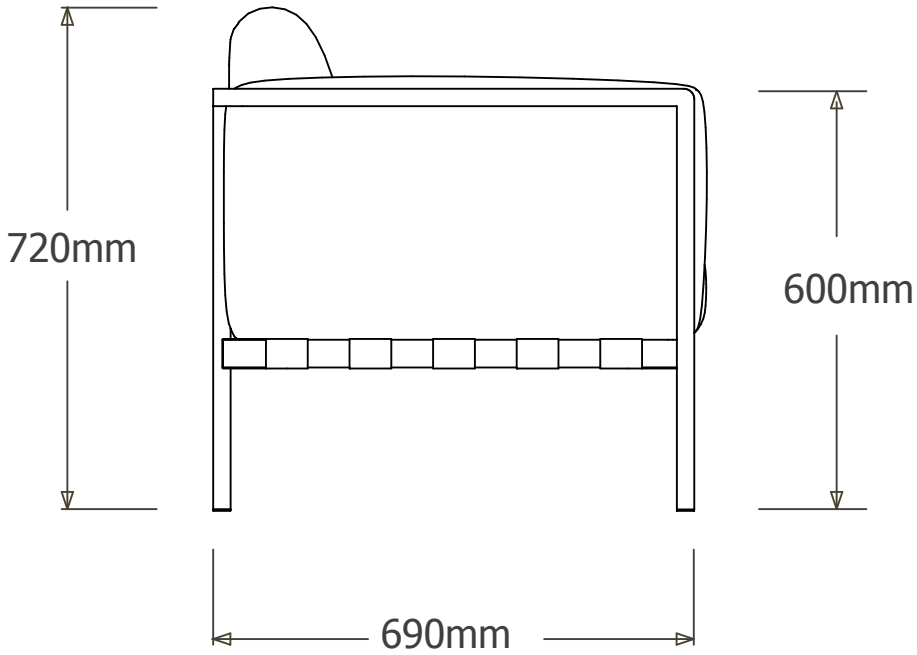
720mm
600mm
690mm

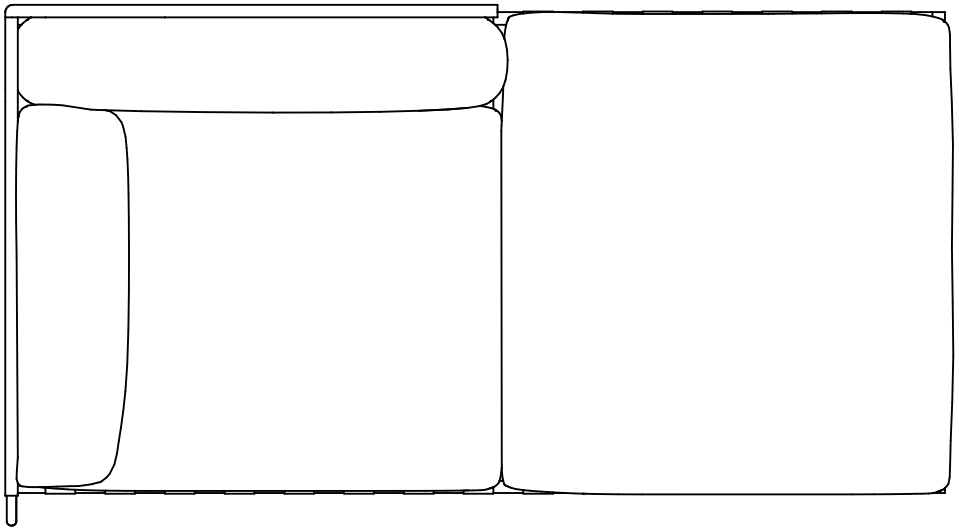

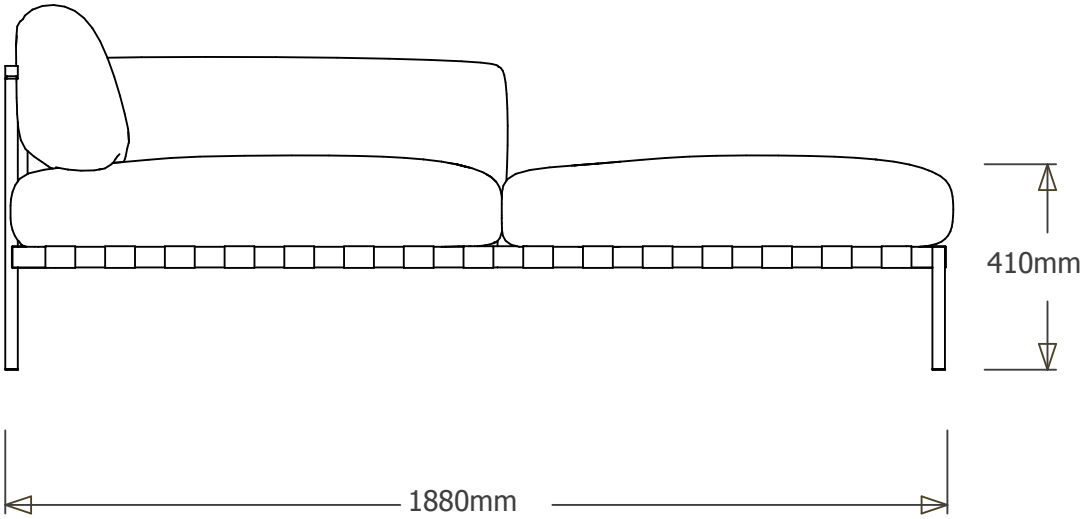
410mm
1880mm

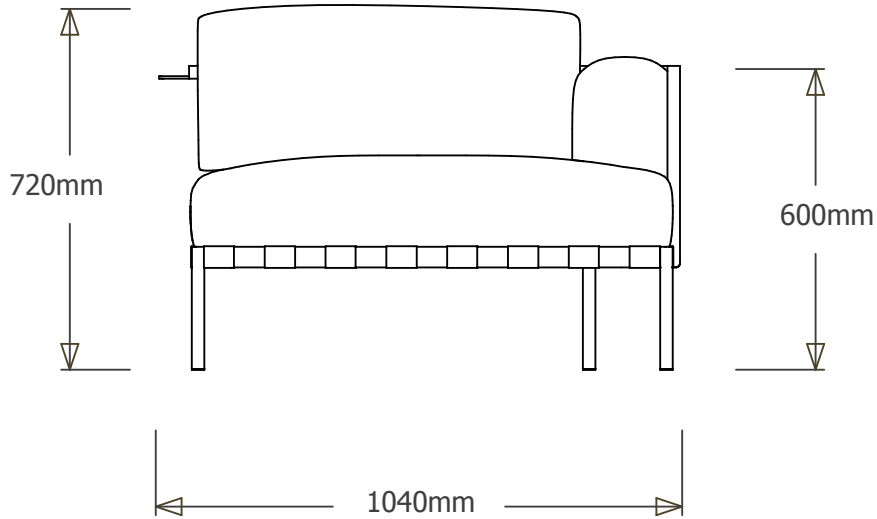
720mm
600mm
1040mm

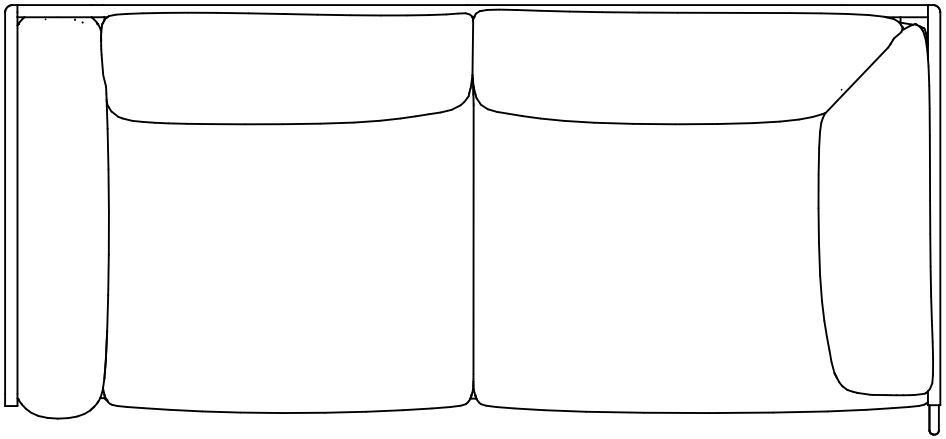

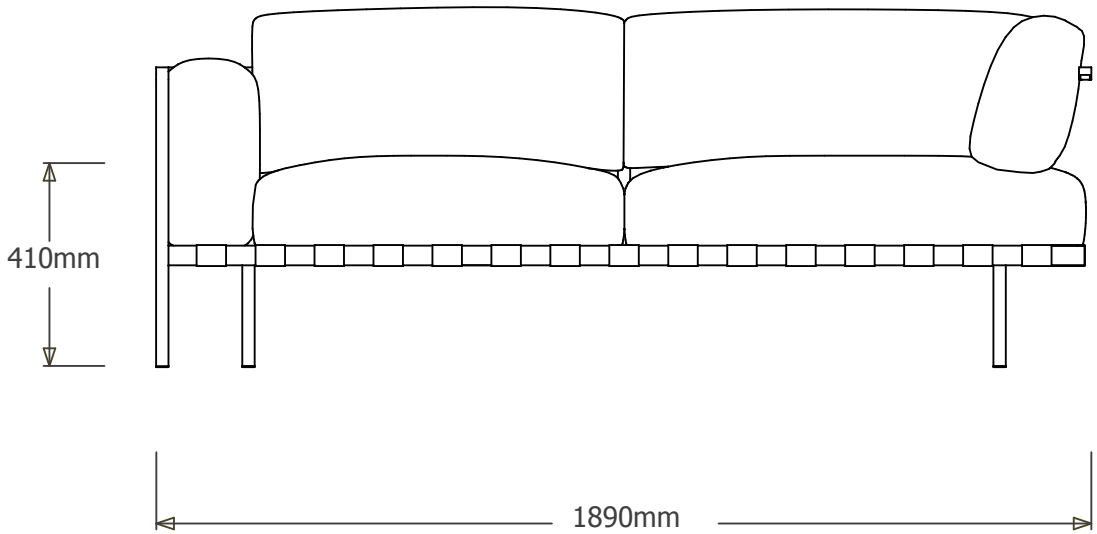
410mm
1890mm

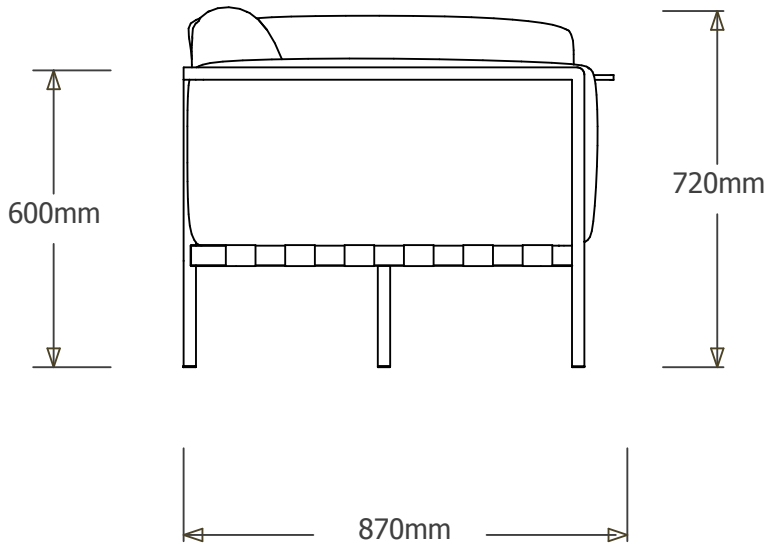
600mm
720mm
870mm

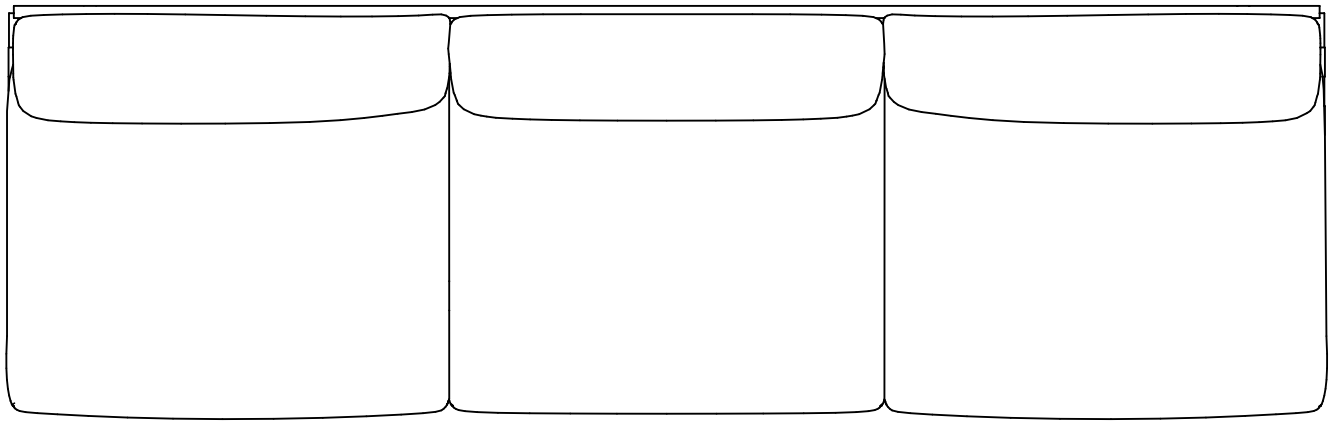

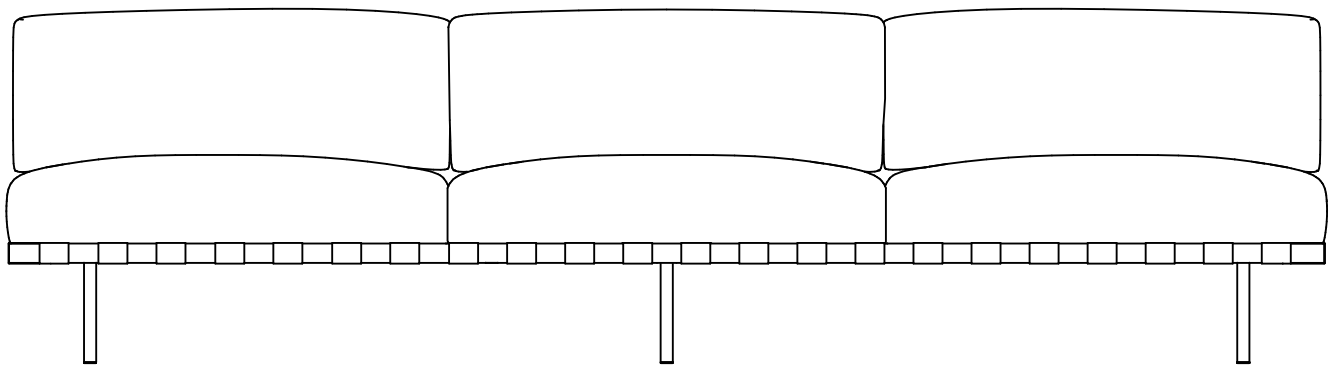

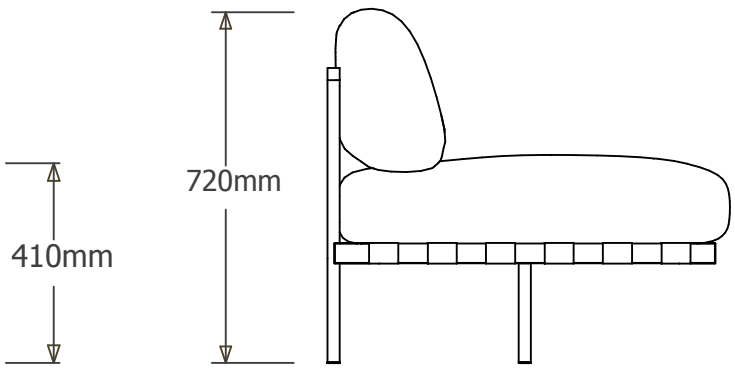

2700mm

795mm

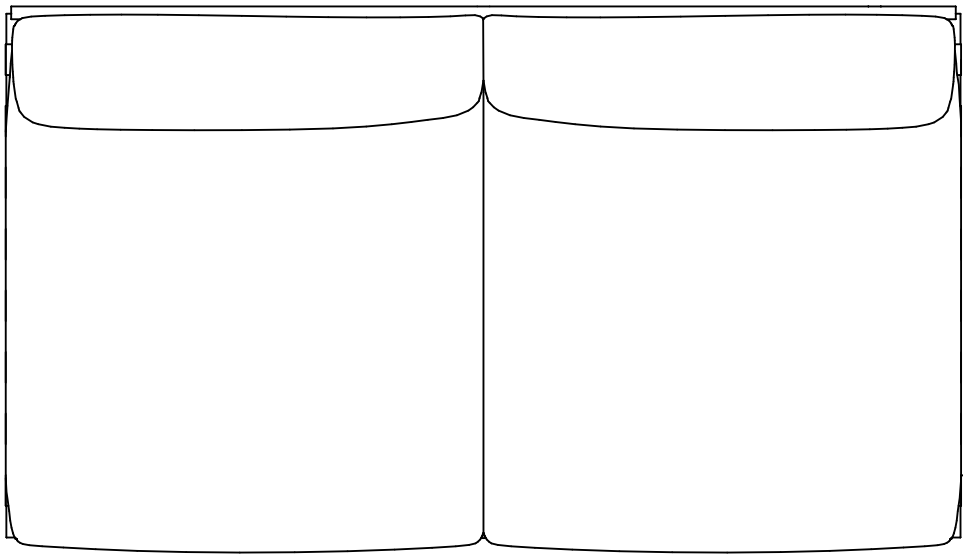

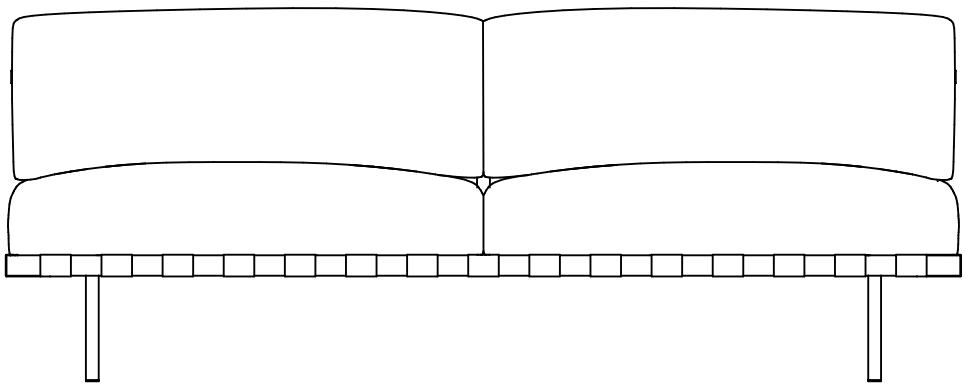

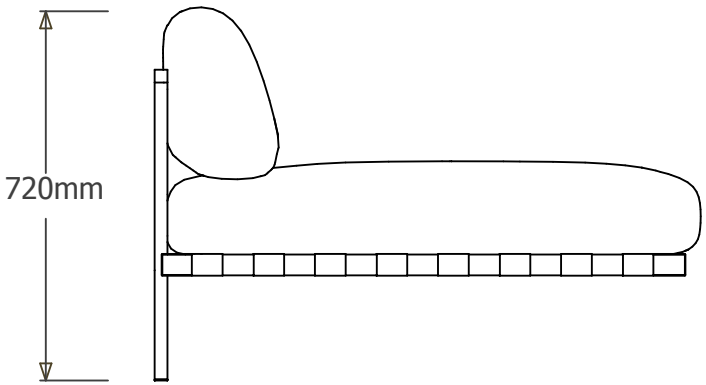

1860mm

1030mm

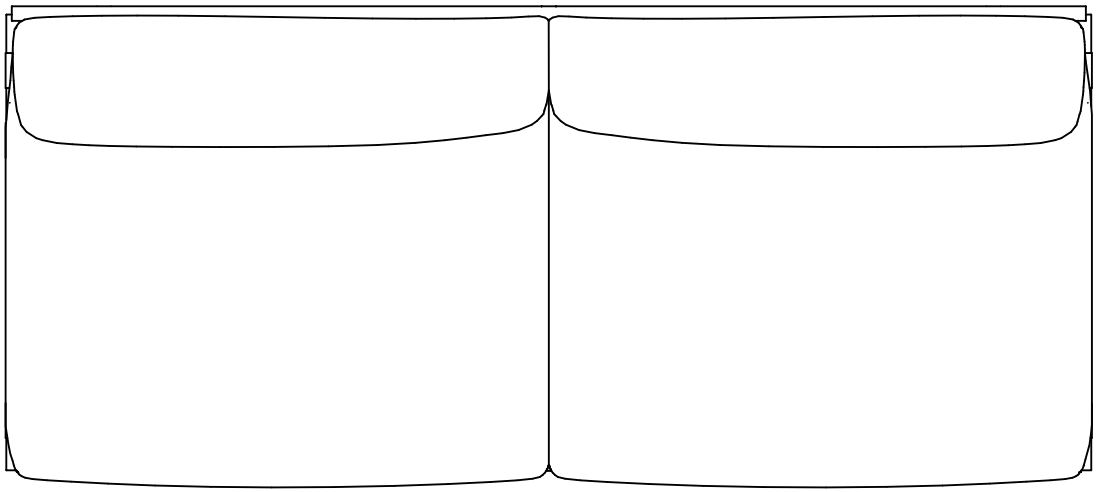

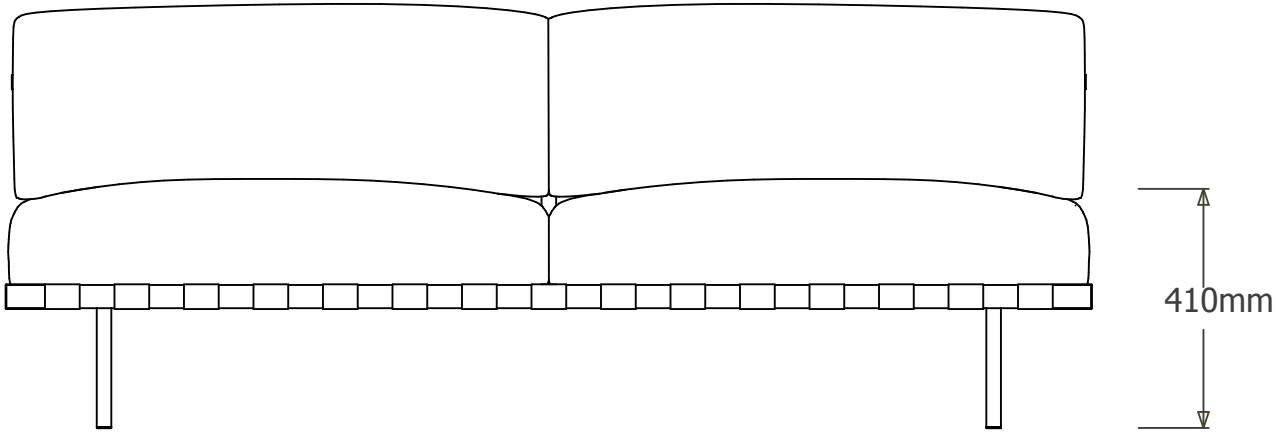
410mm
1860mm

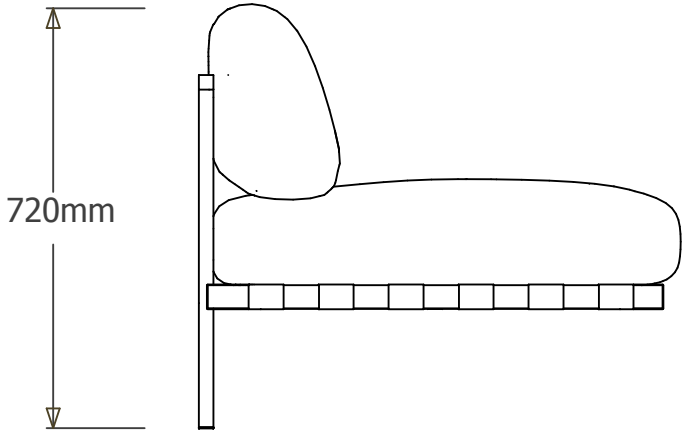
720mm
795mm

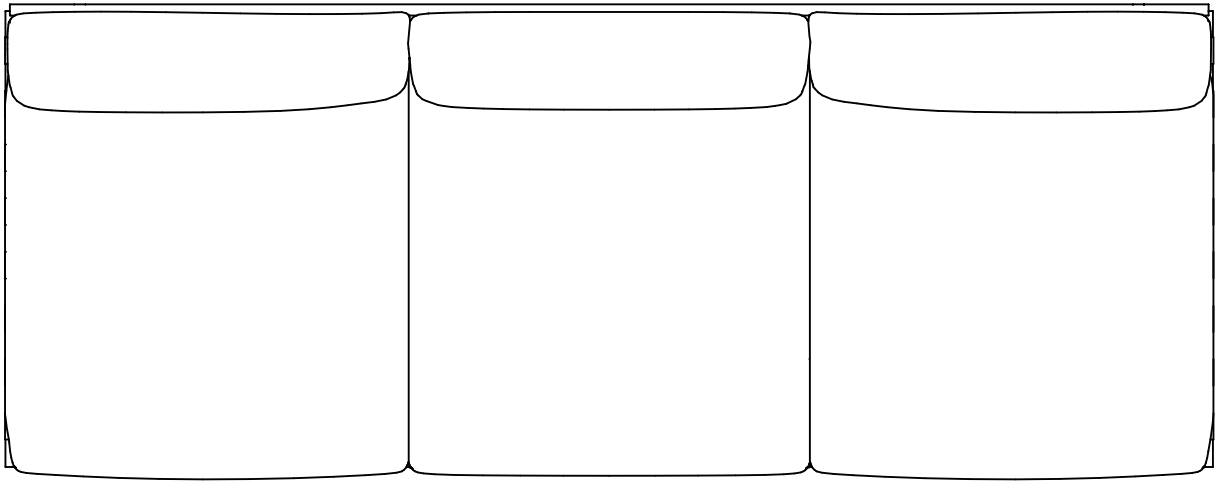

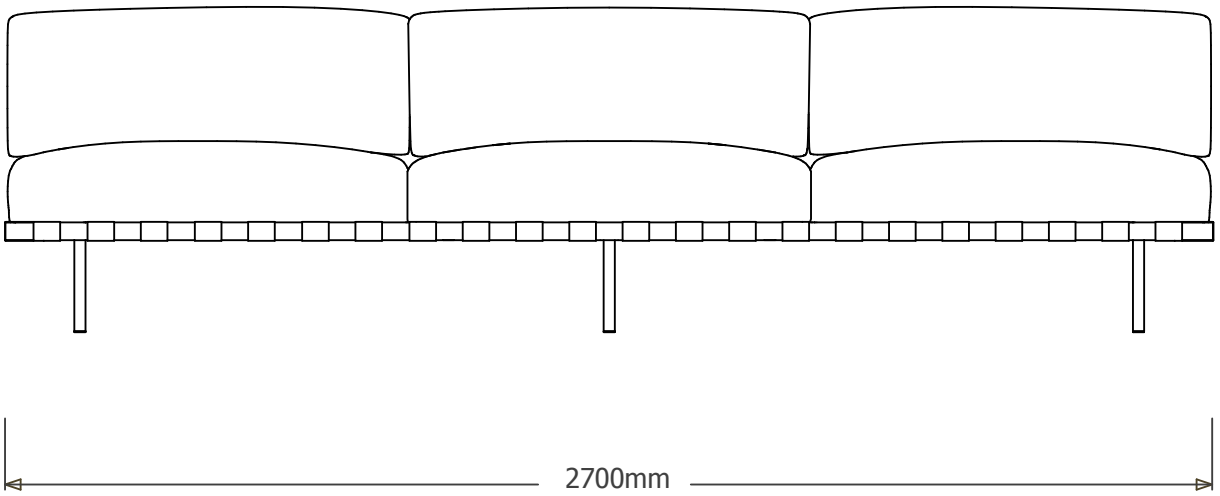
410mm
2700mm

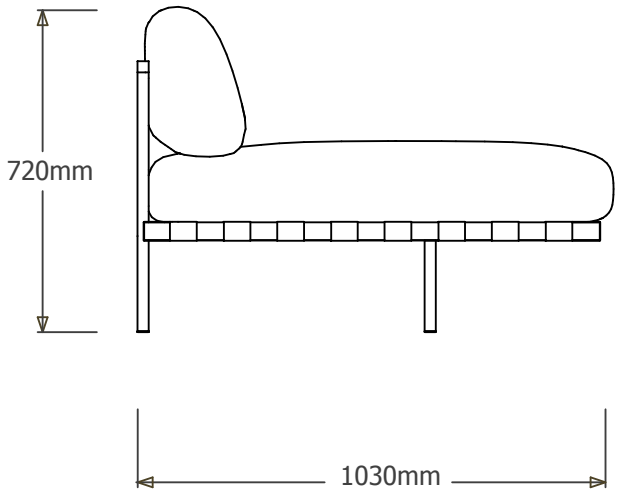
720mm
1030mm

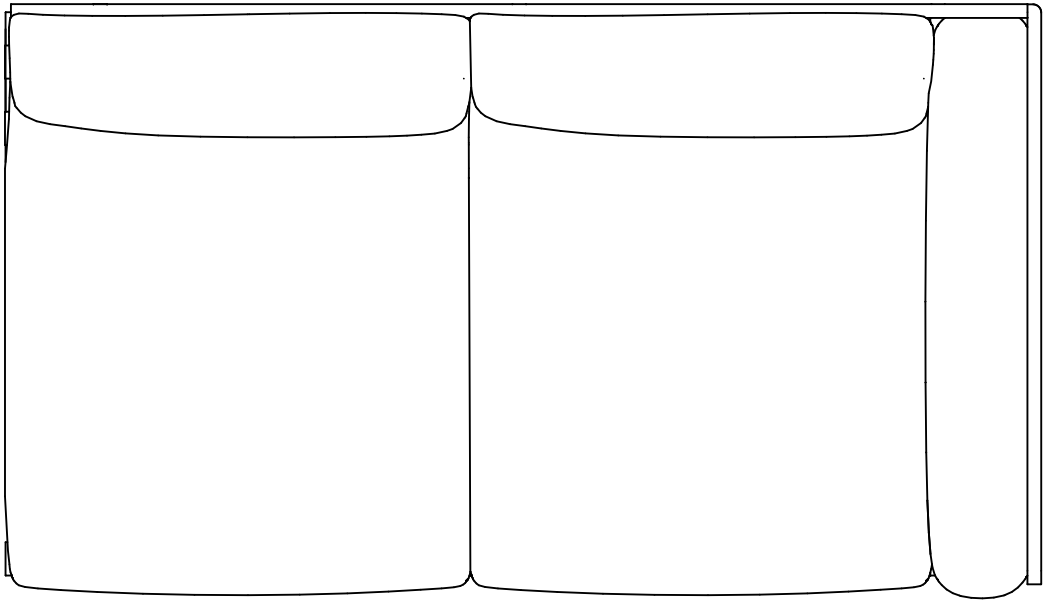

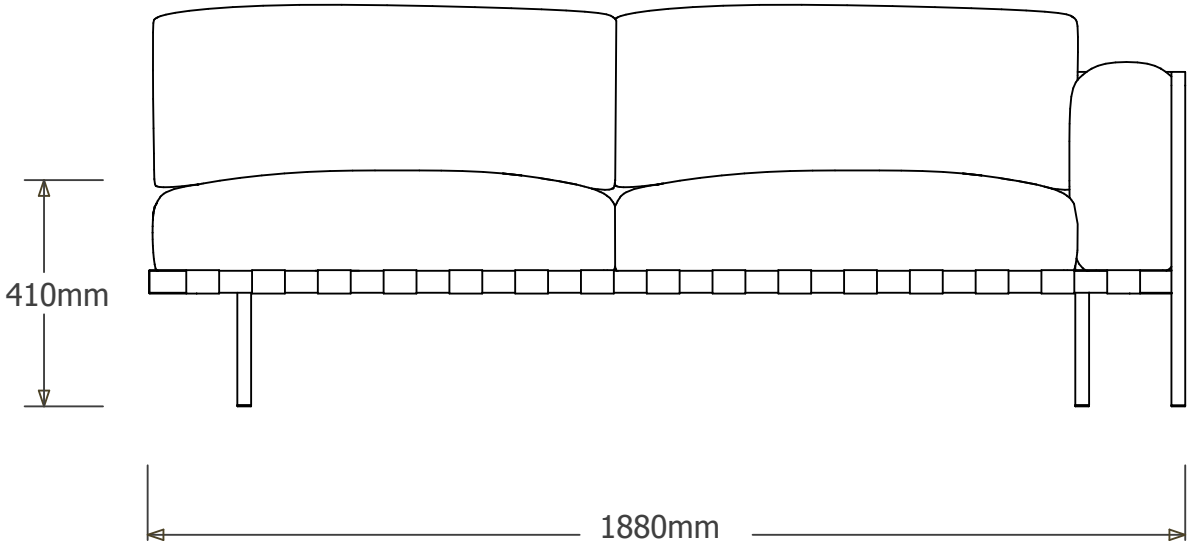
410mm
1880mm

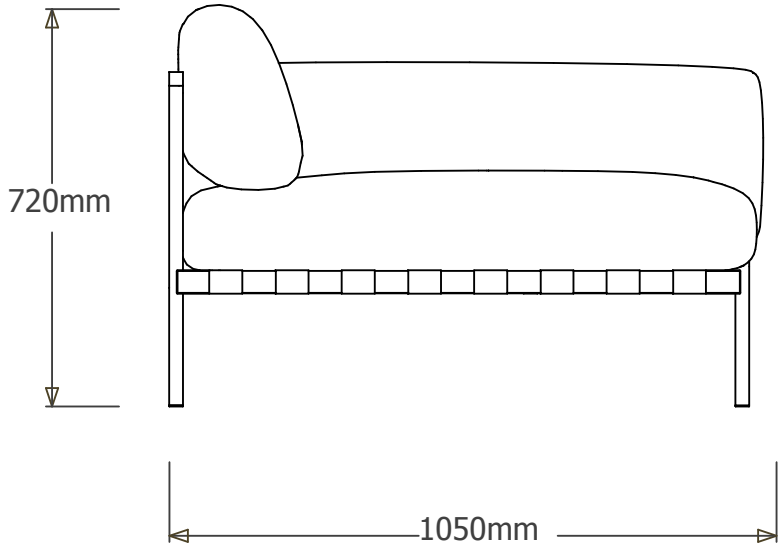
720mm
1050mm

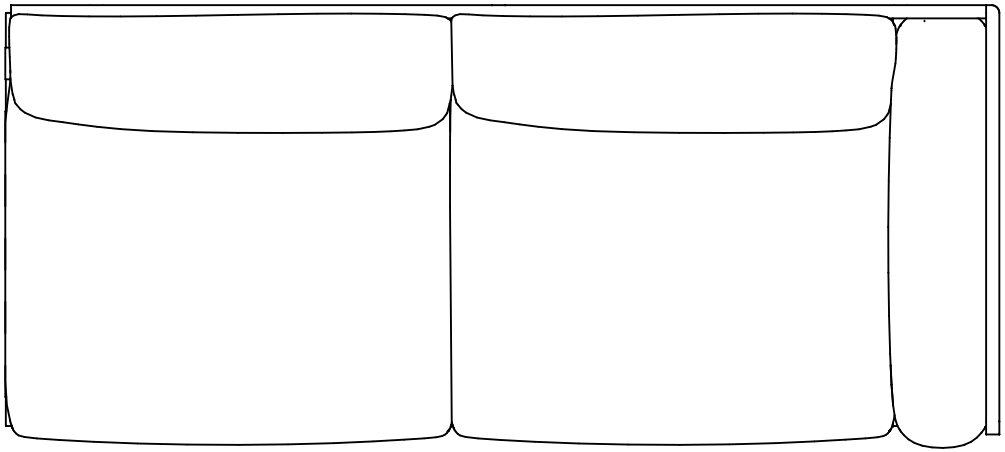

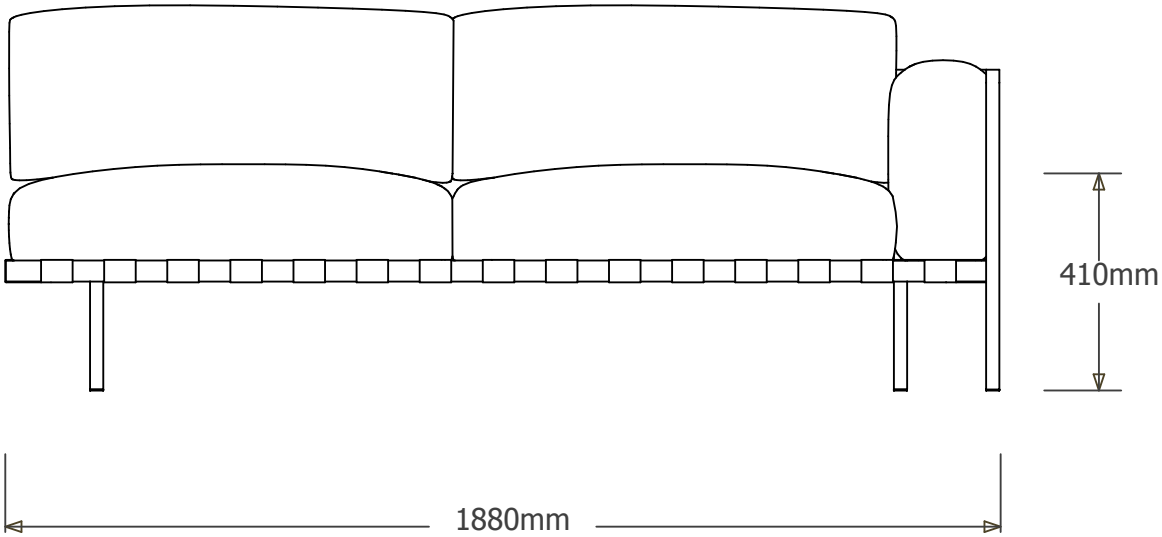
410mm
1880mm

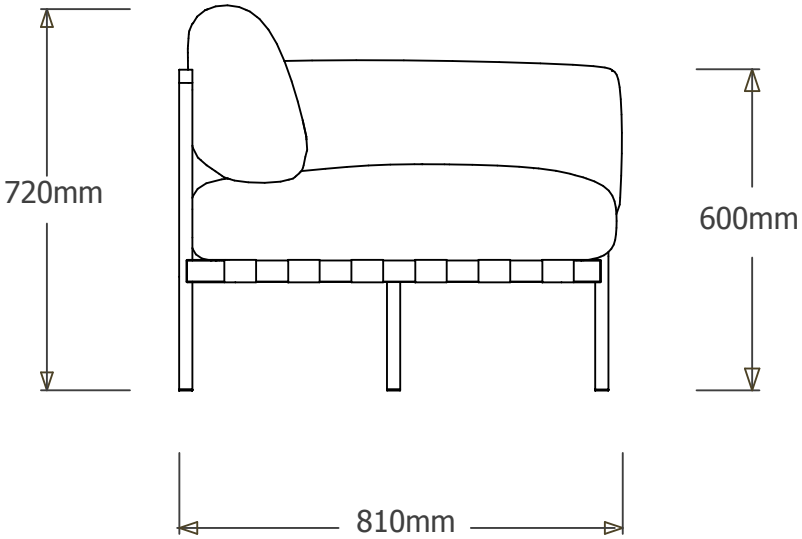
720mm
600mm
810mm

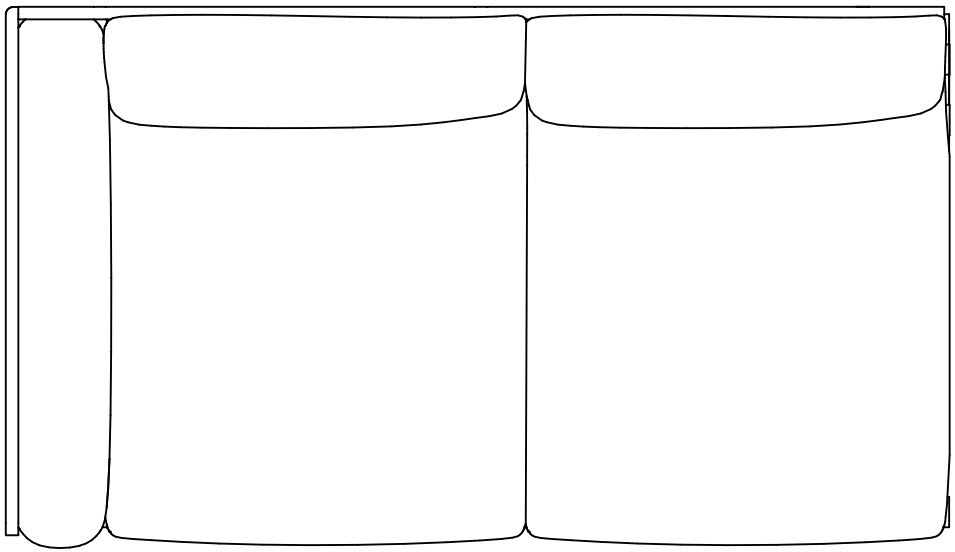

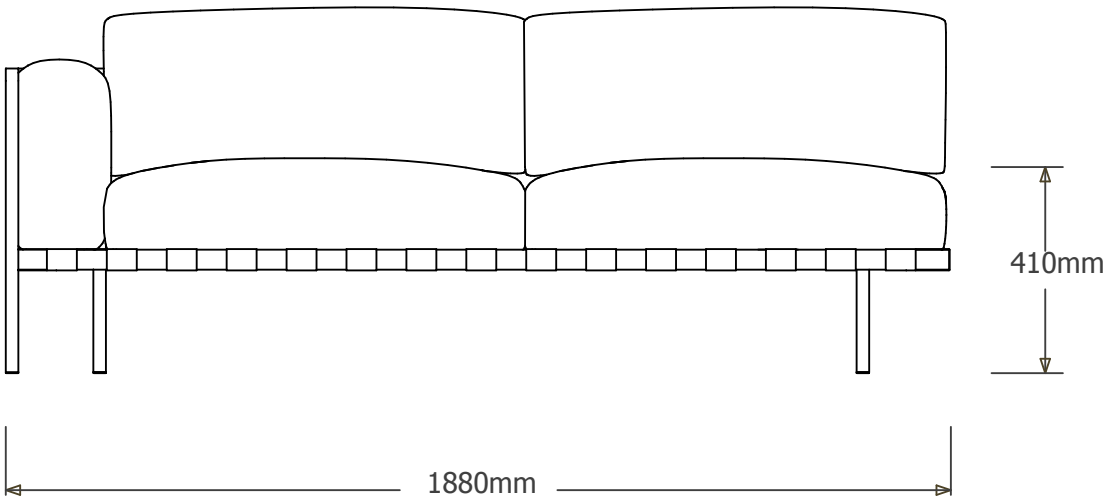
410mm
1880mm

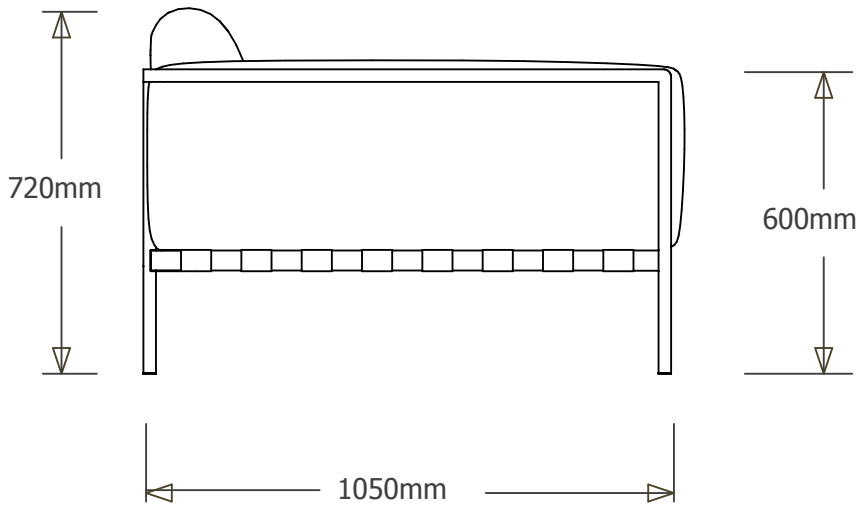
720mm
600mm
1050mm

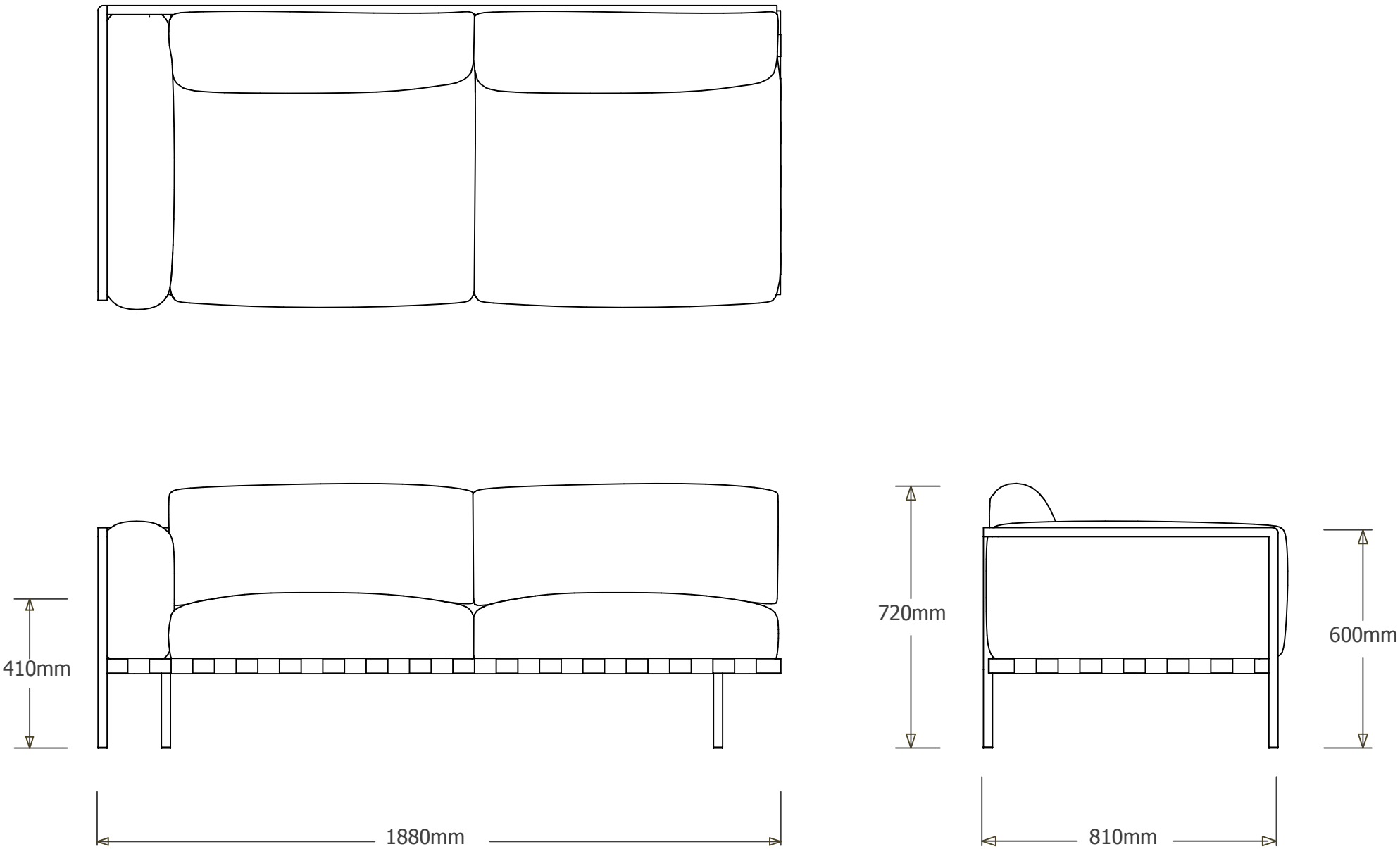
410mm
720mm
600mm
1880mm
810mm

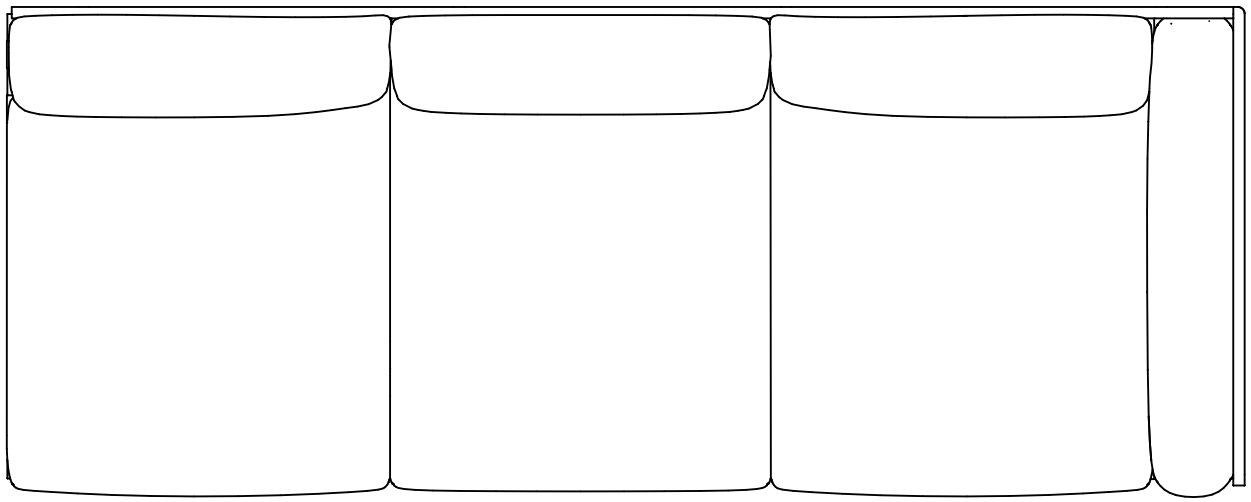

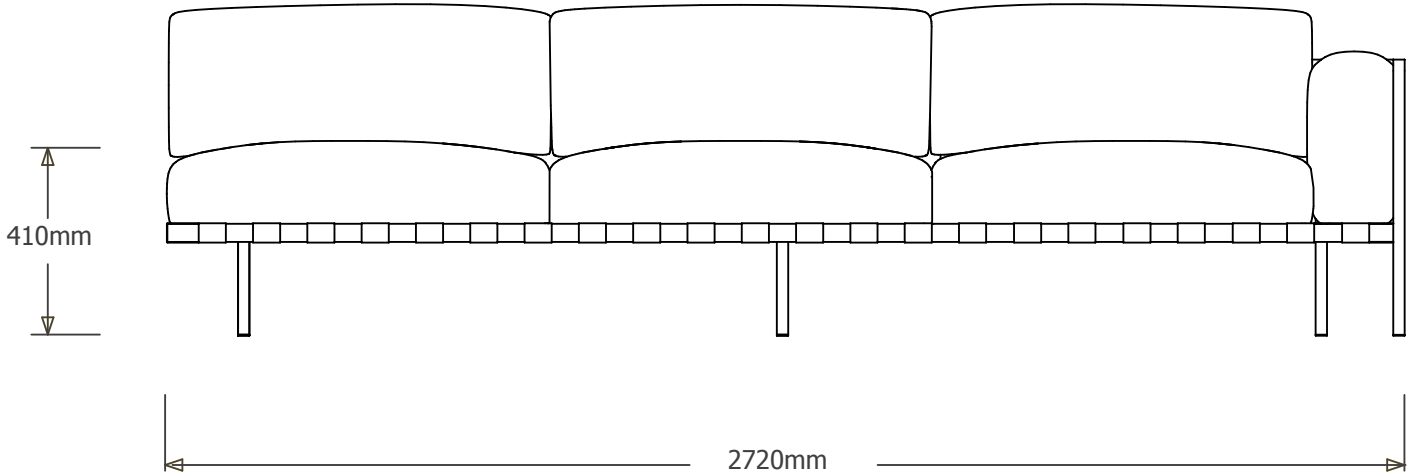
410mm
2720mm

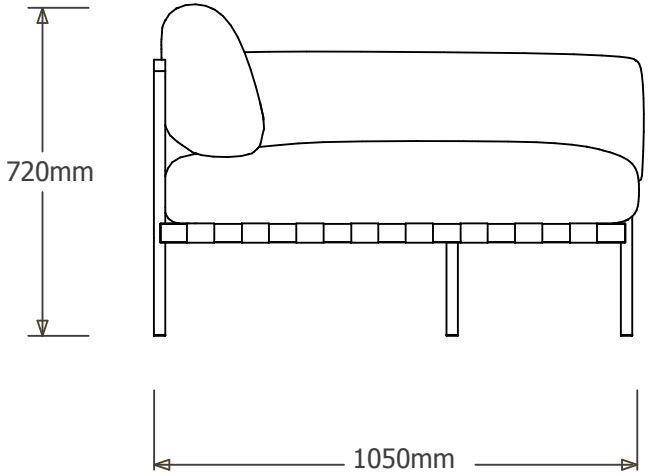
720mm
1050mm

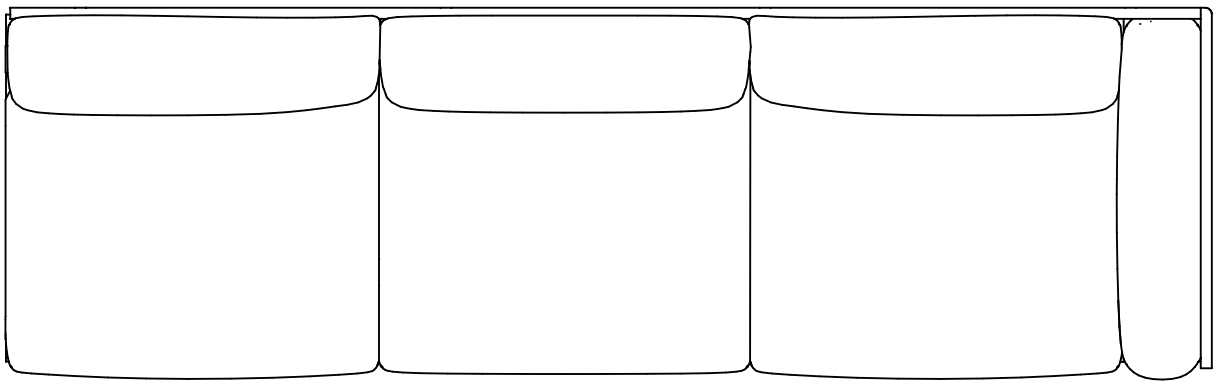

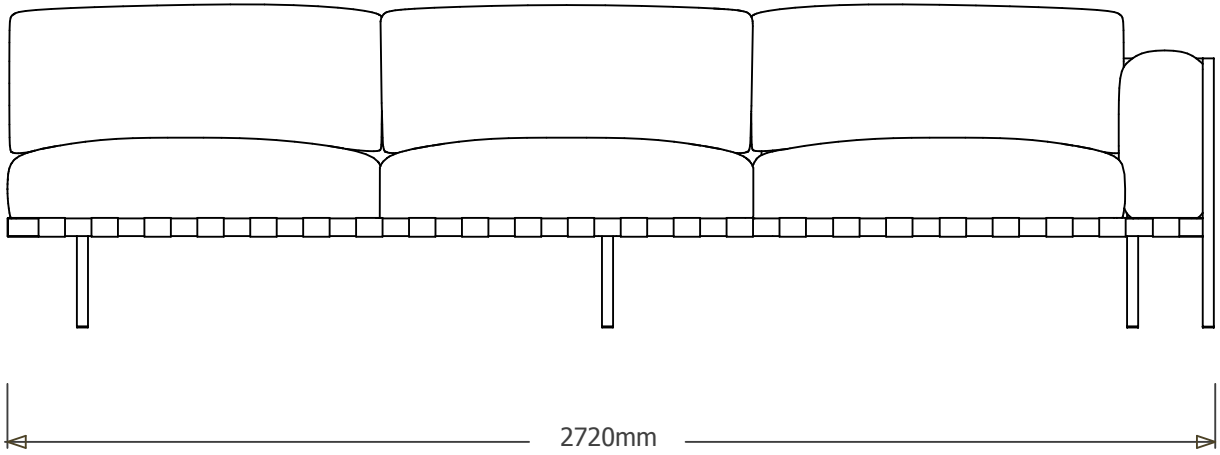
2720mm

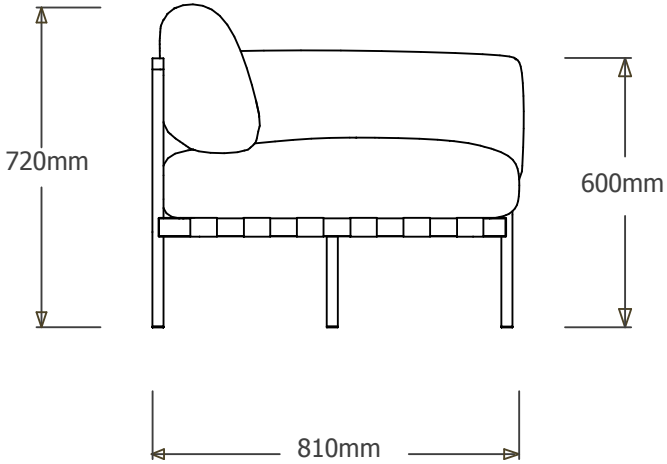
720mm
600mm
810mm

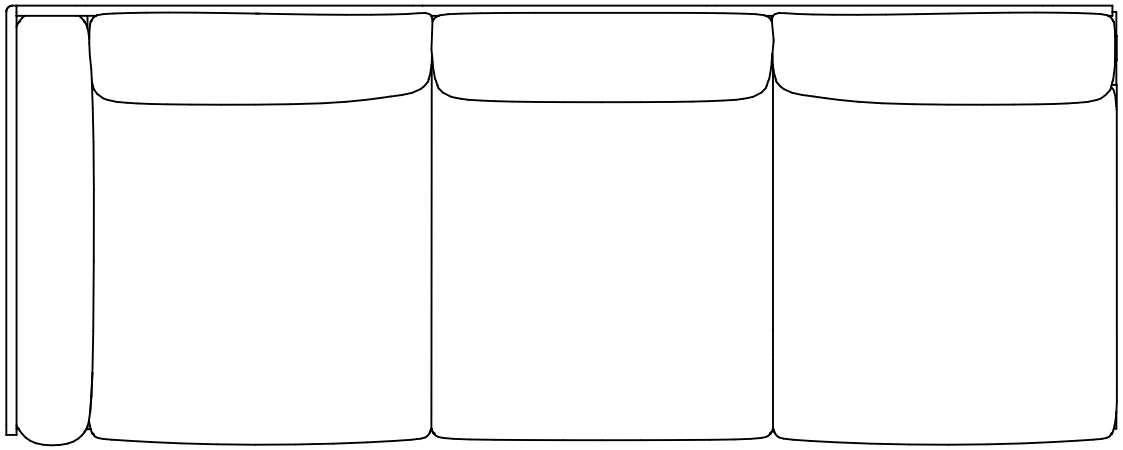

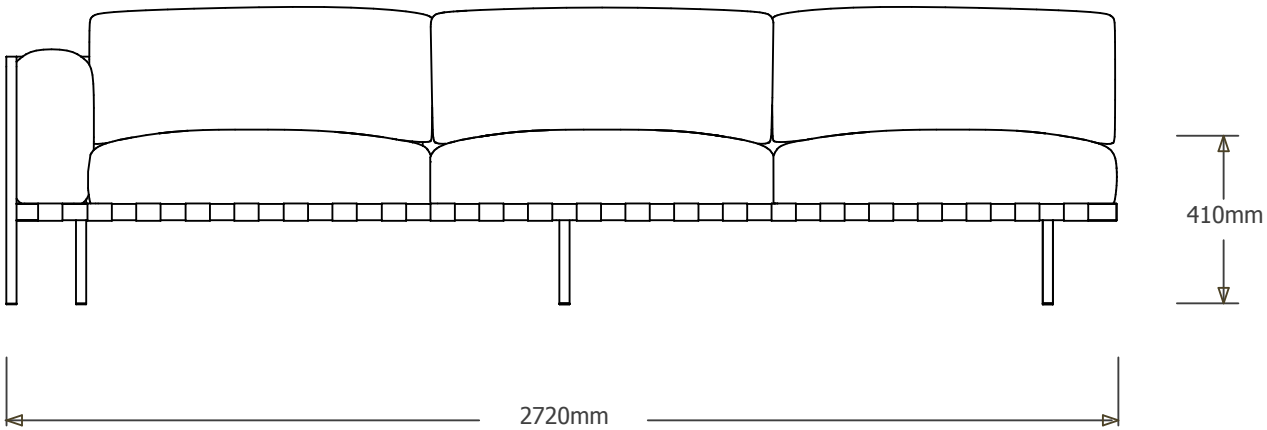
410mm
2720mm

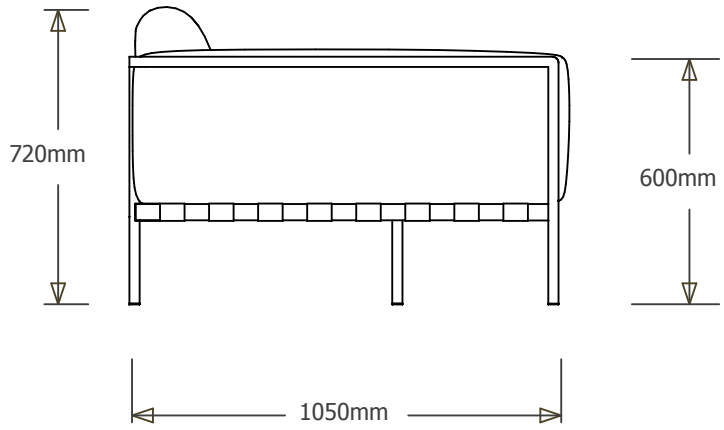
720mm
600mm
1050mm

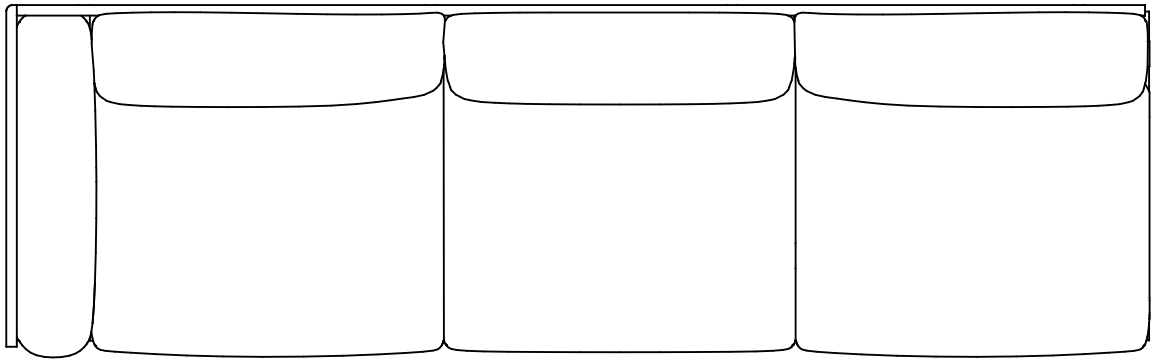

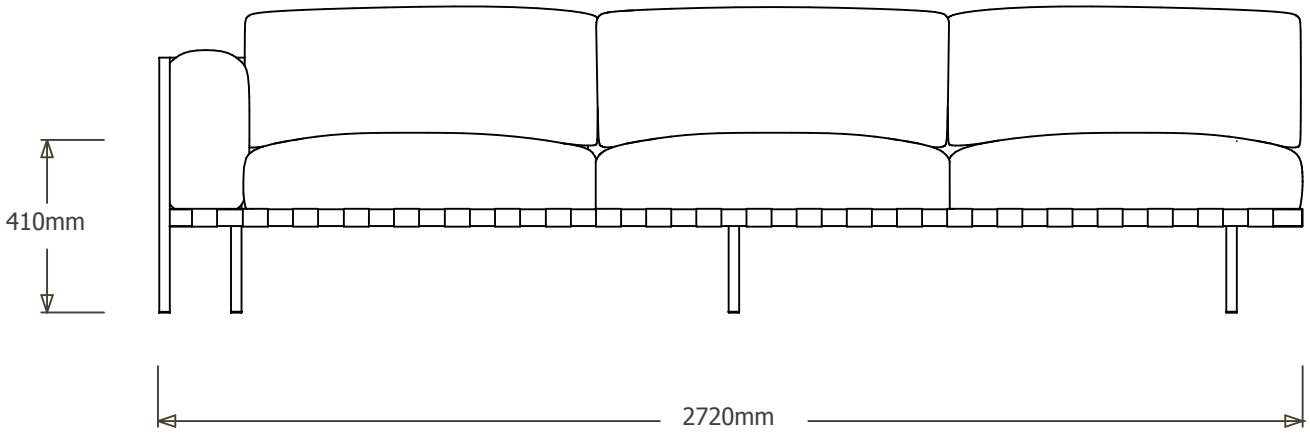
410mm
2720mm

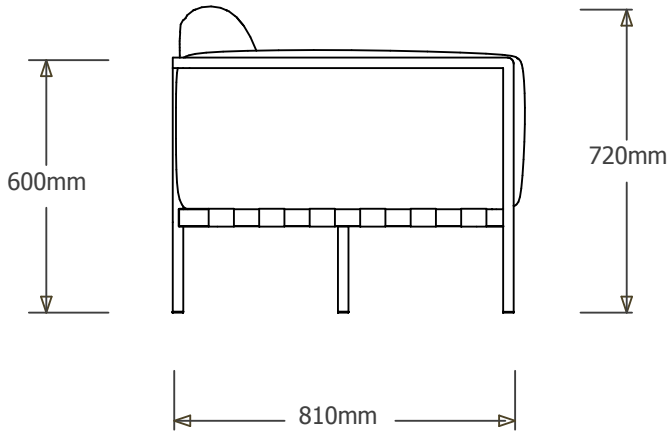
600mm
720mm
810mm

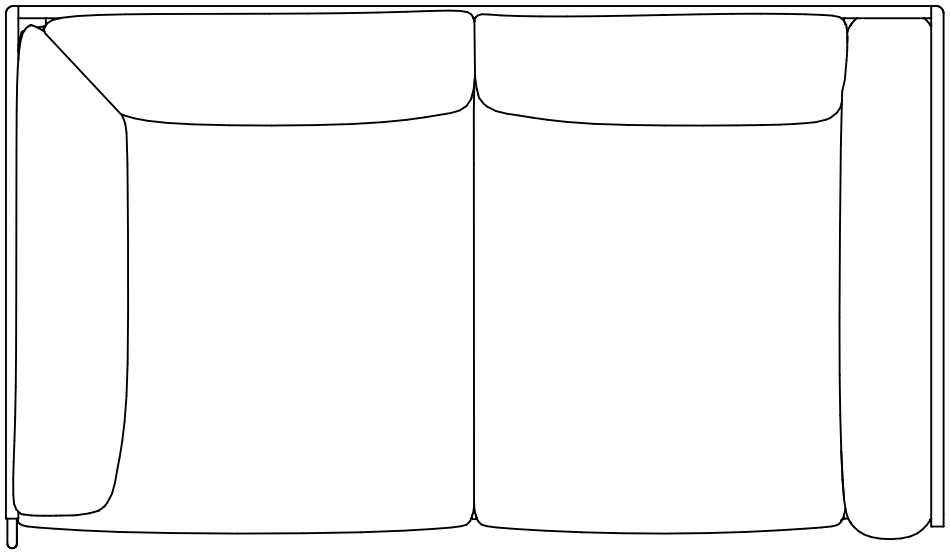

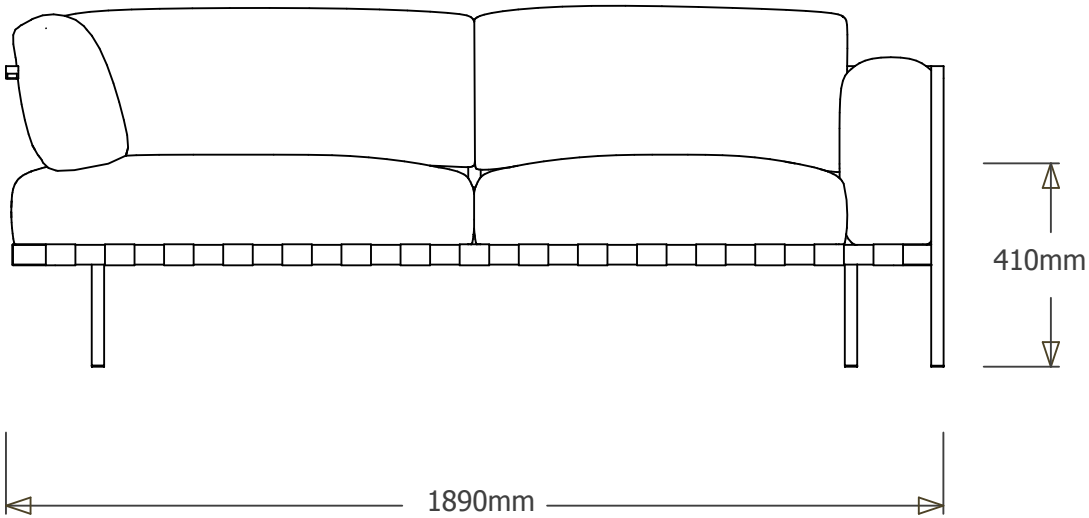
410mm
1890mm

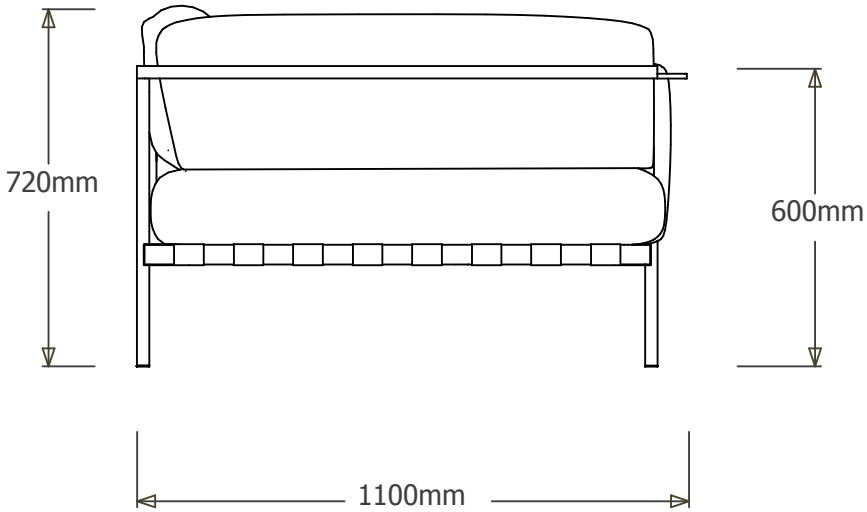
720mm
600mm
1100mm

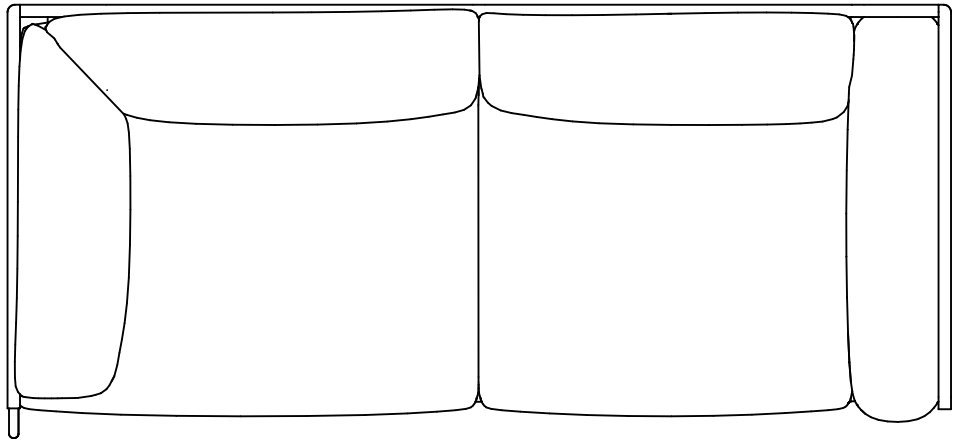

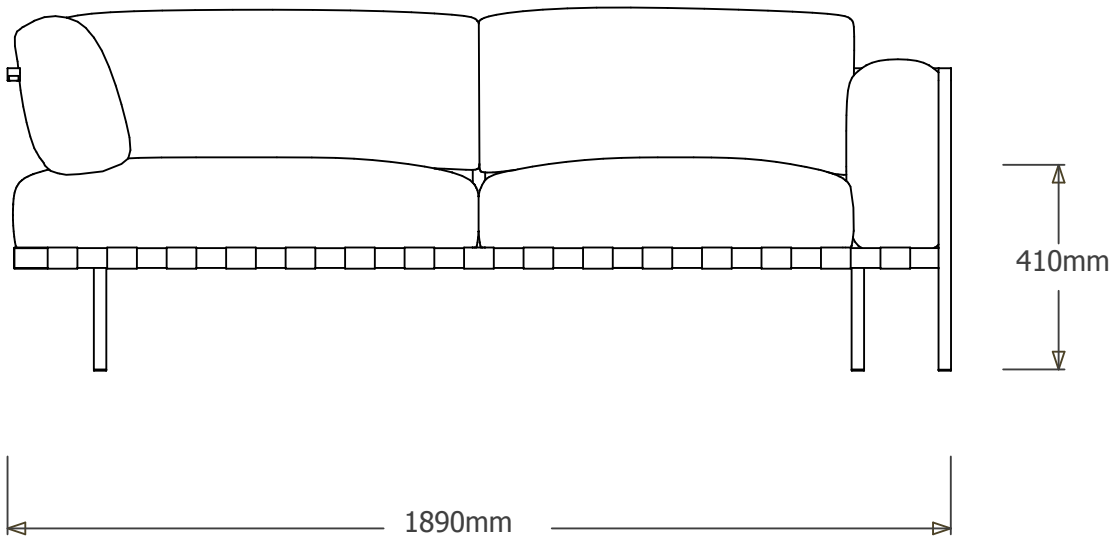
410mm
1890mm

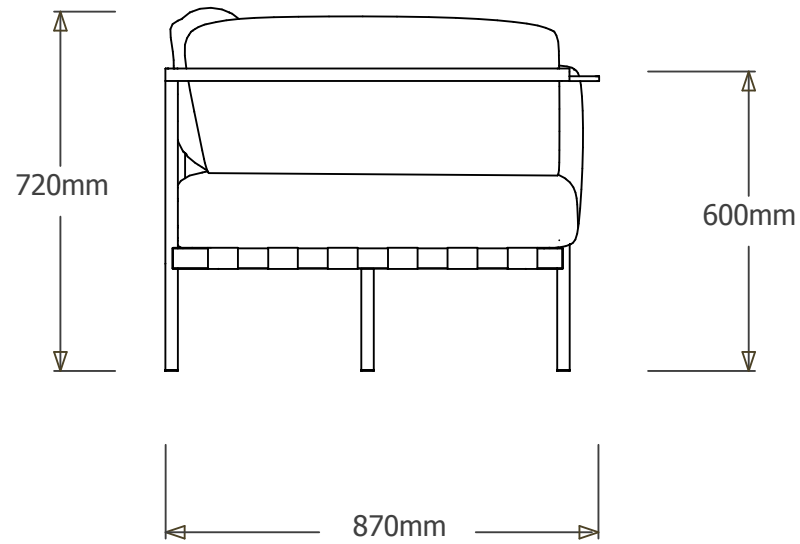
720mm
600mm
870mm

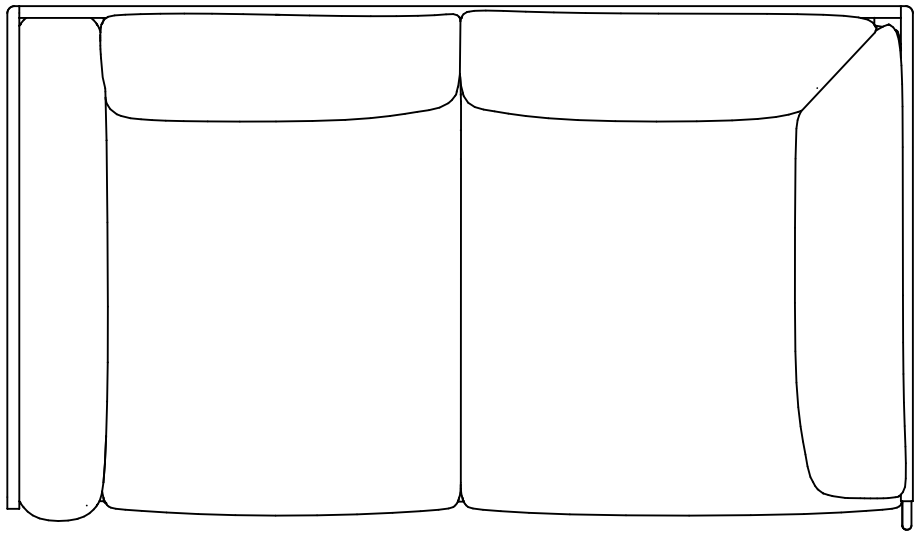

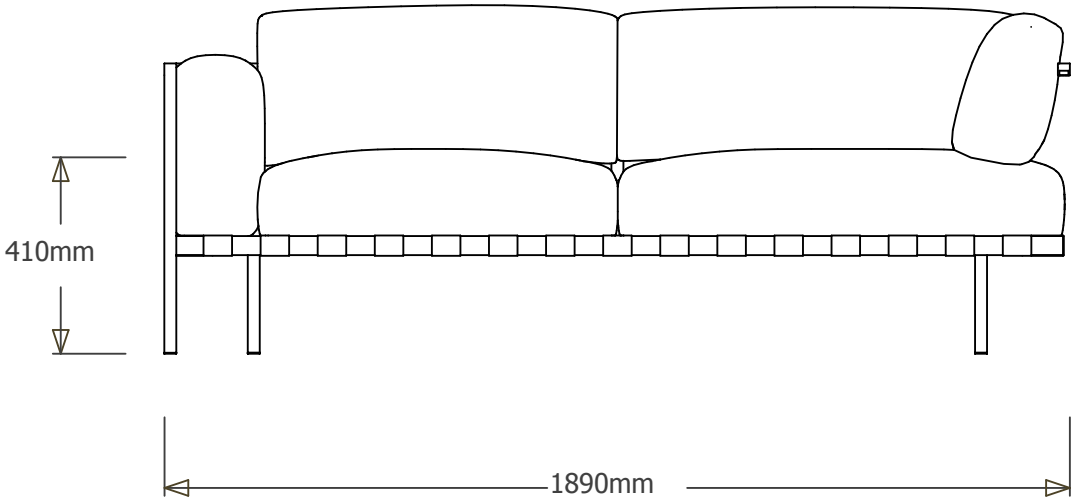
410mm
1890mm

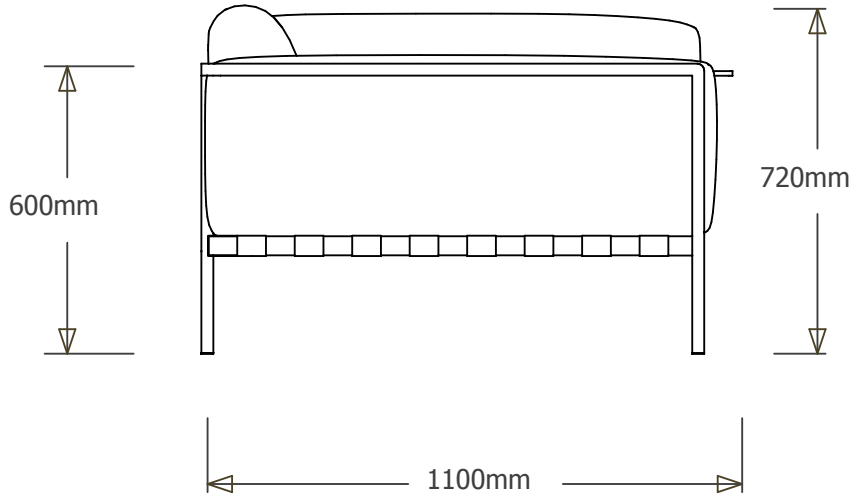
600mm
720mm
1100mm

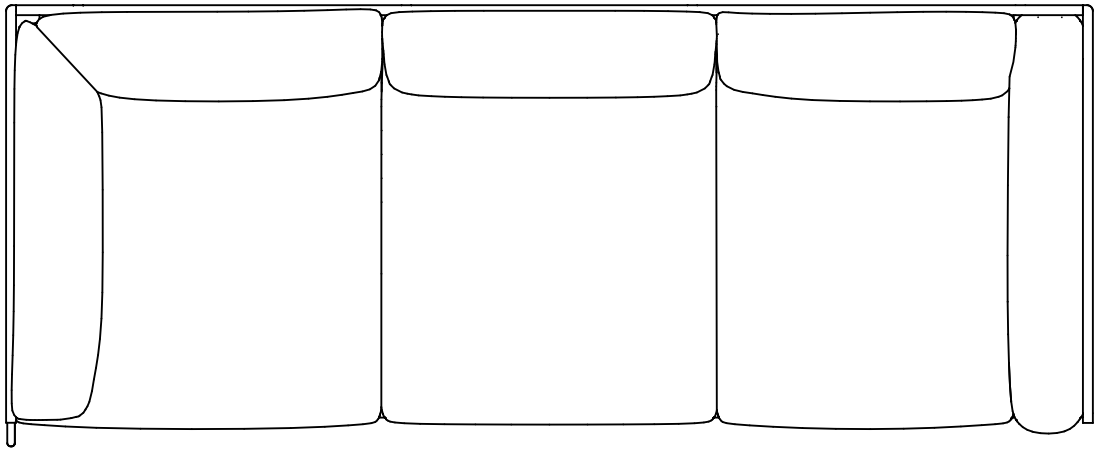

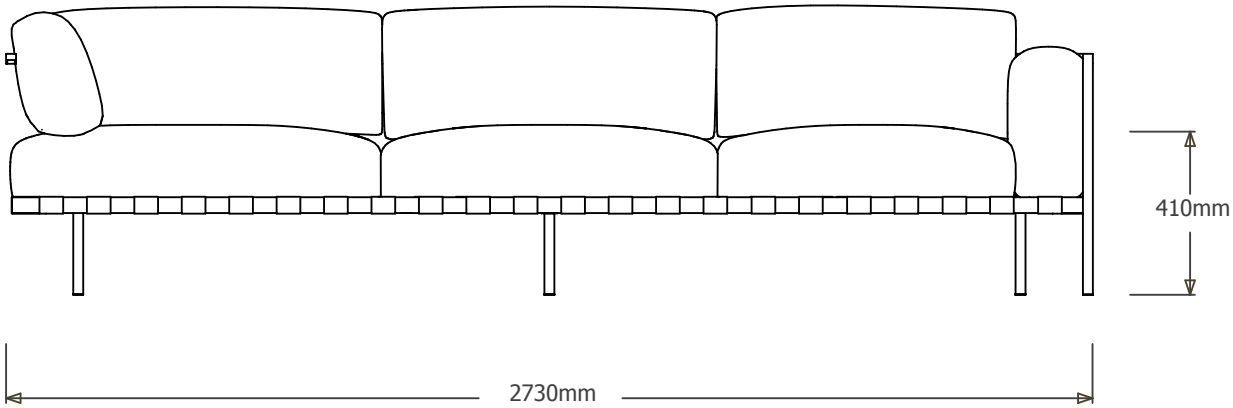
410mm
2730mm

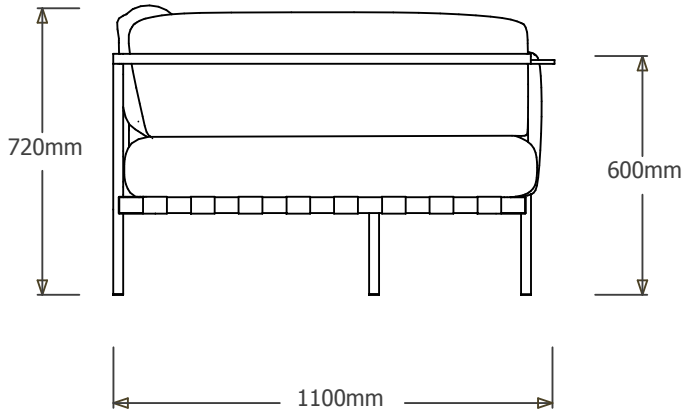
720mm
600mm
1100mm

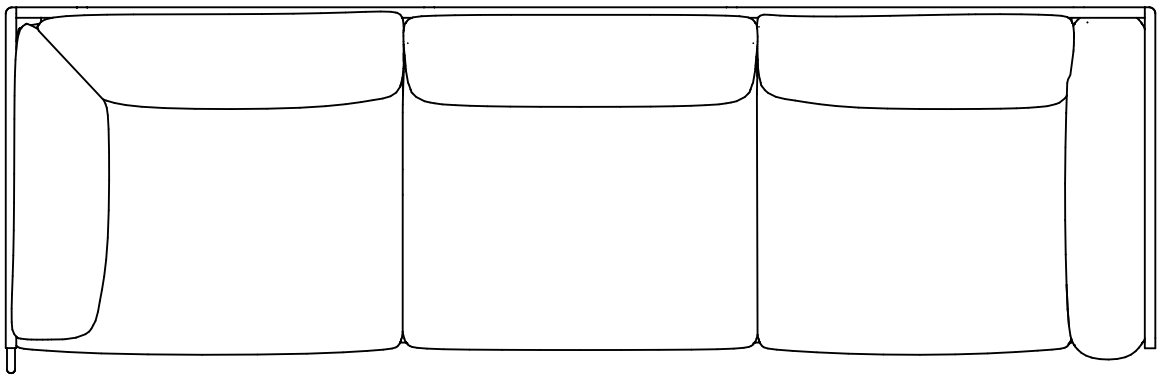

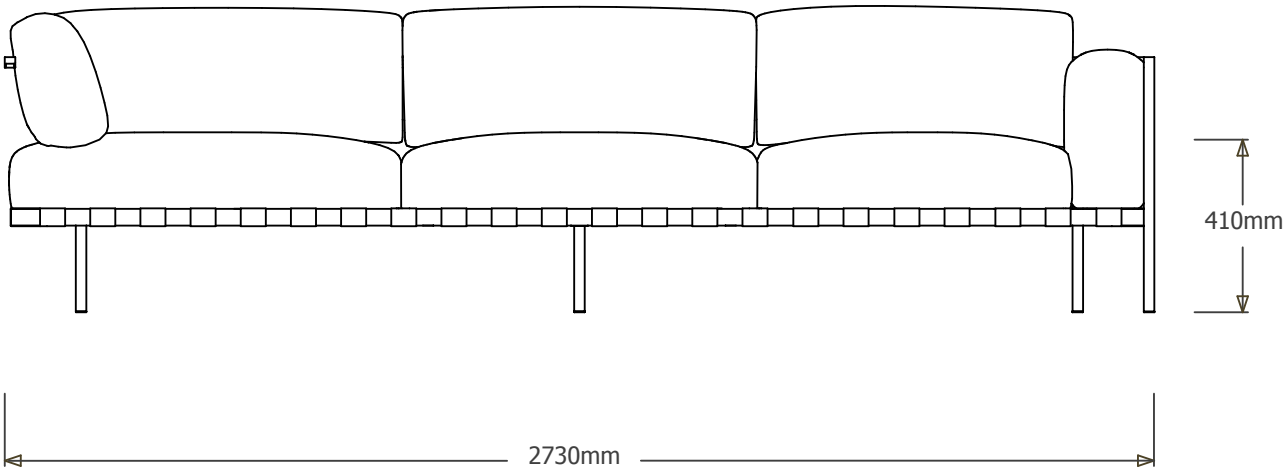
410mm
2730mm

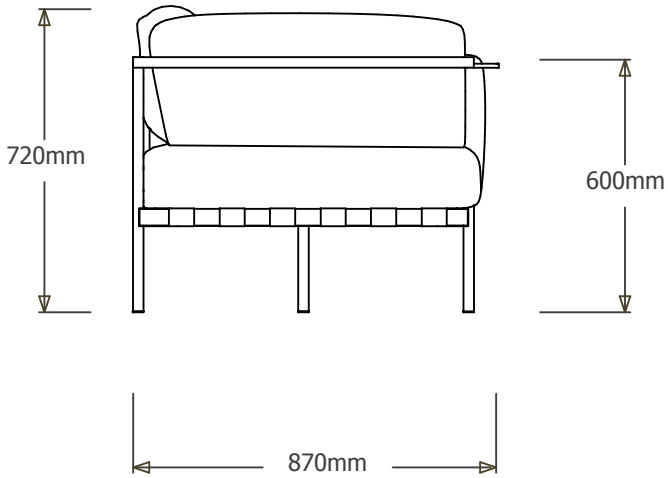
720mm
600mm
870mm

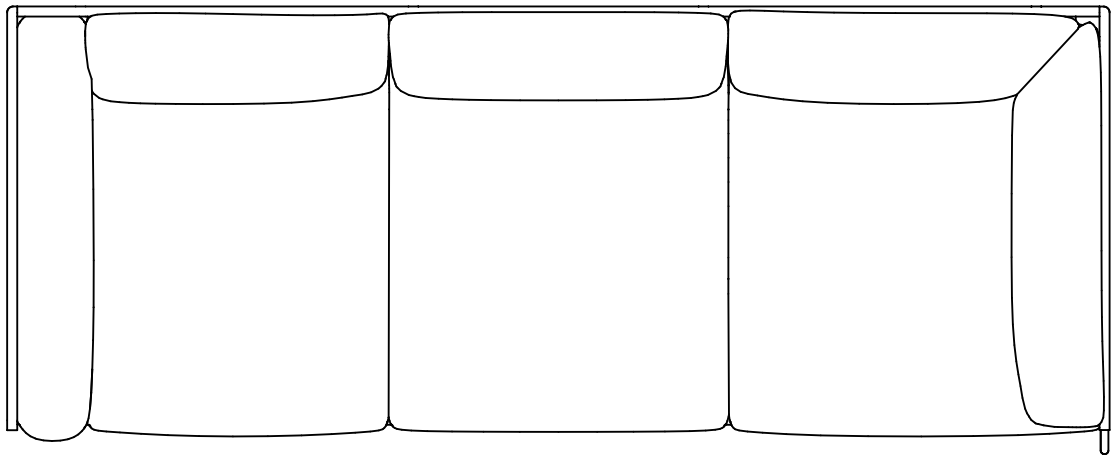

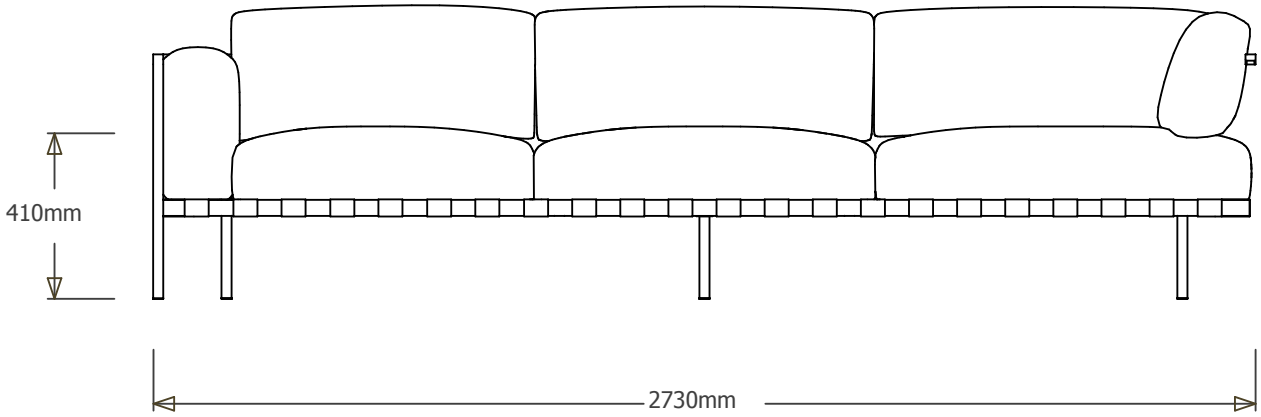
410mm
2730mm

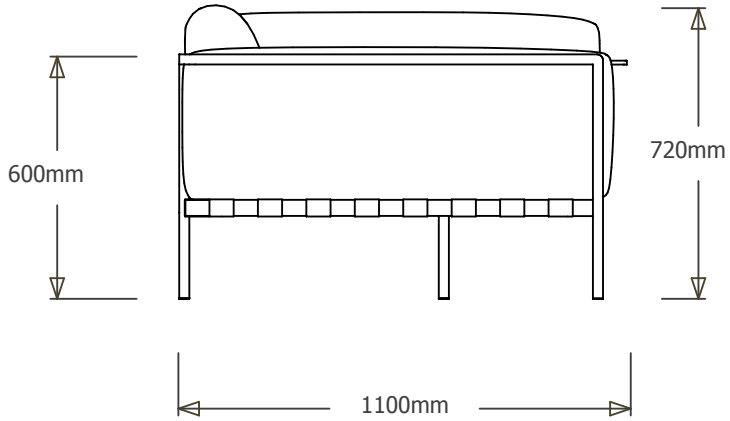
600mm
720mm
1100mm

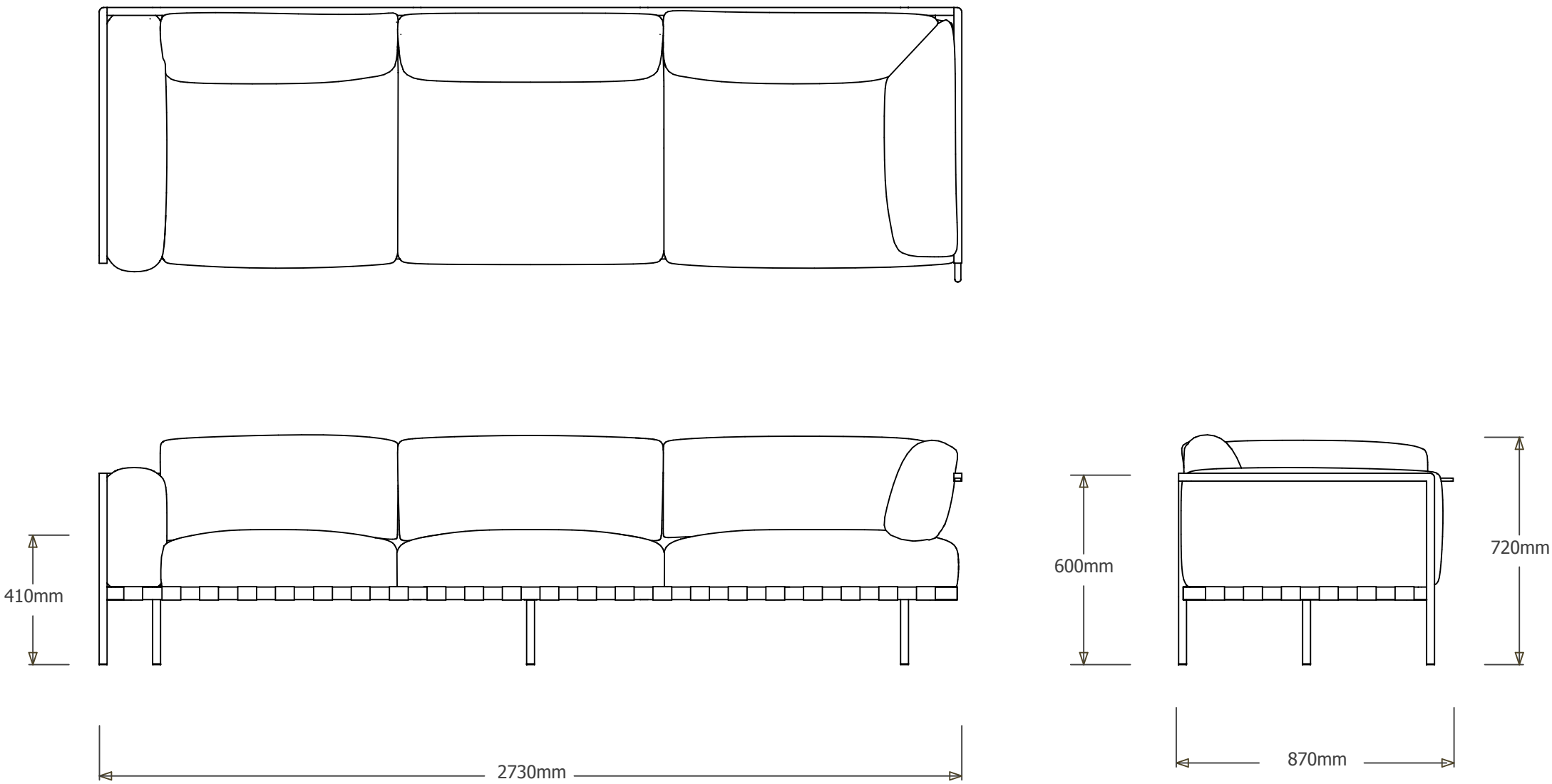
410mm
2730mm
600mm
720mm
870mm

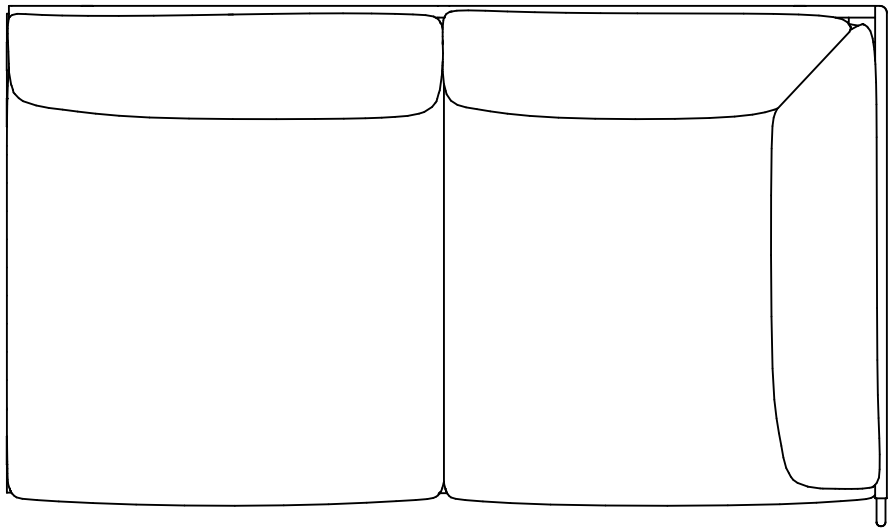

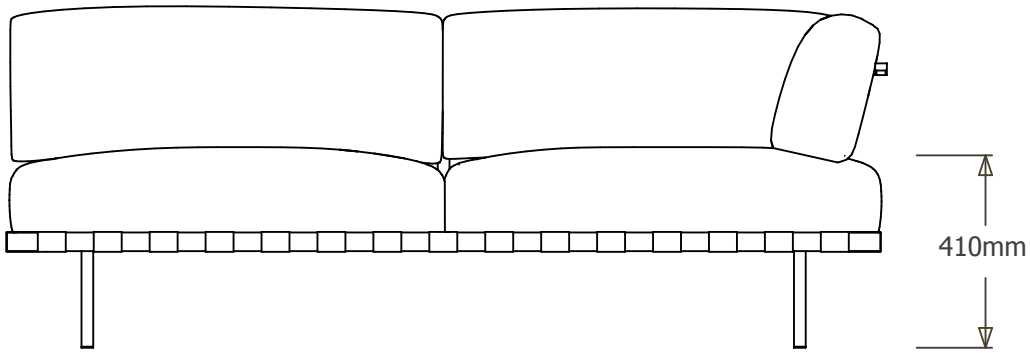

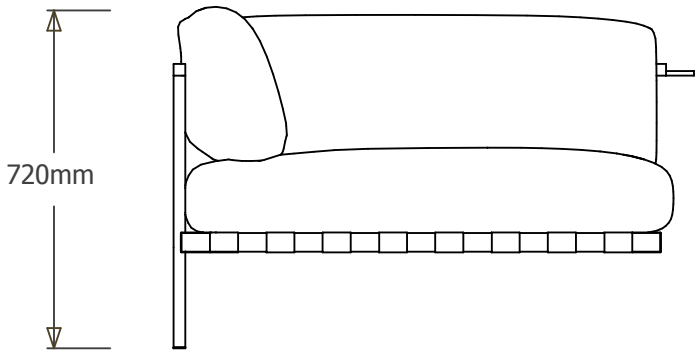

1860mm

1100mm

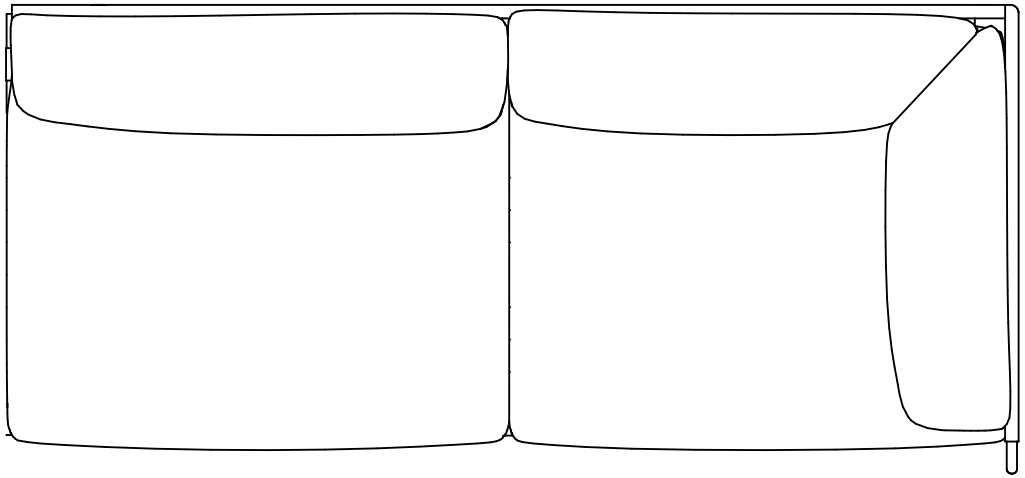

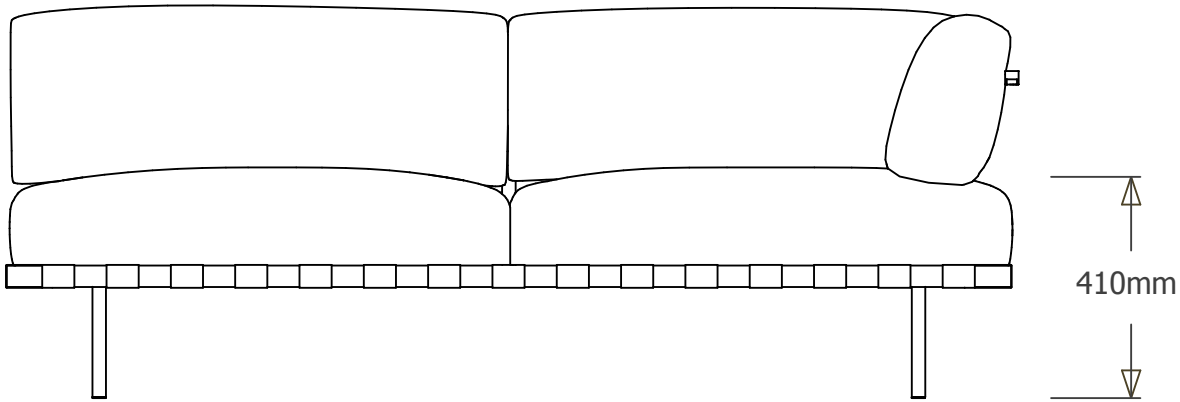

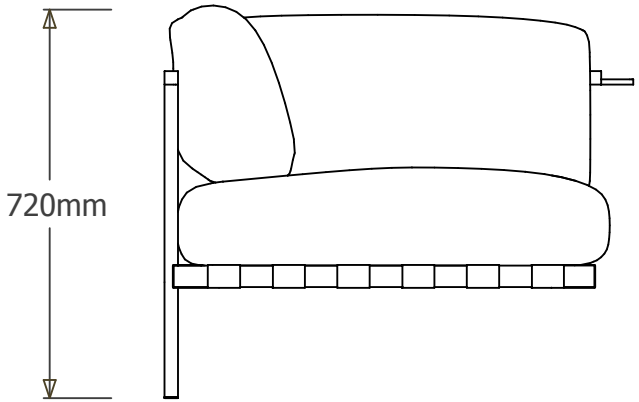

1860mm

870mm

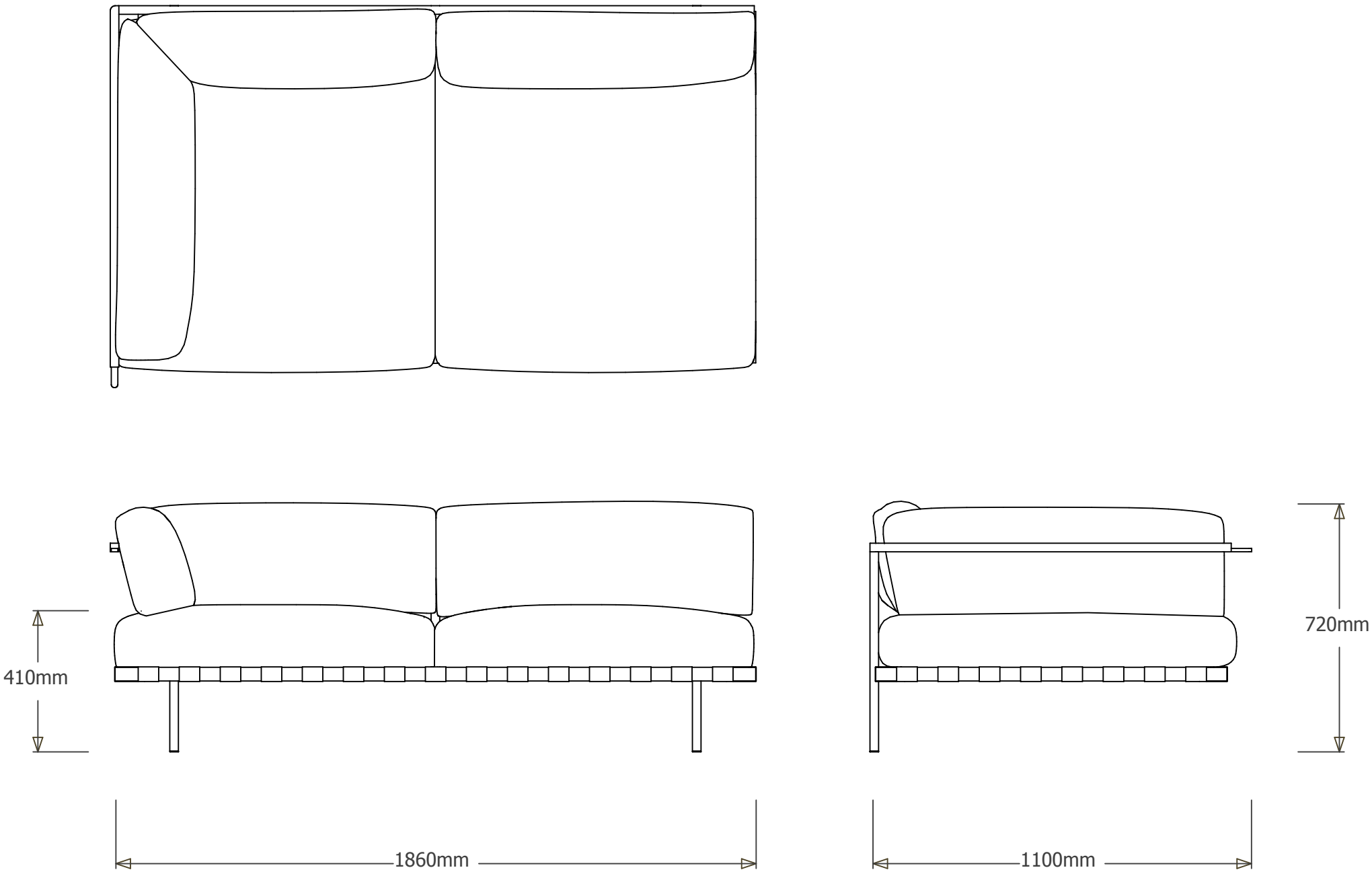
410mm
720mm
1860mm
1100mm

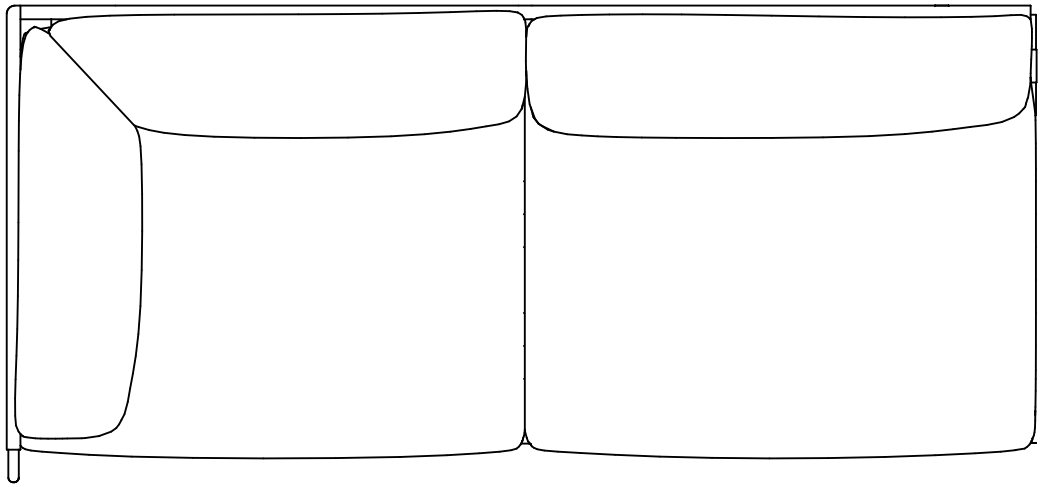

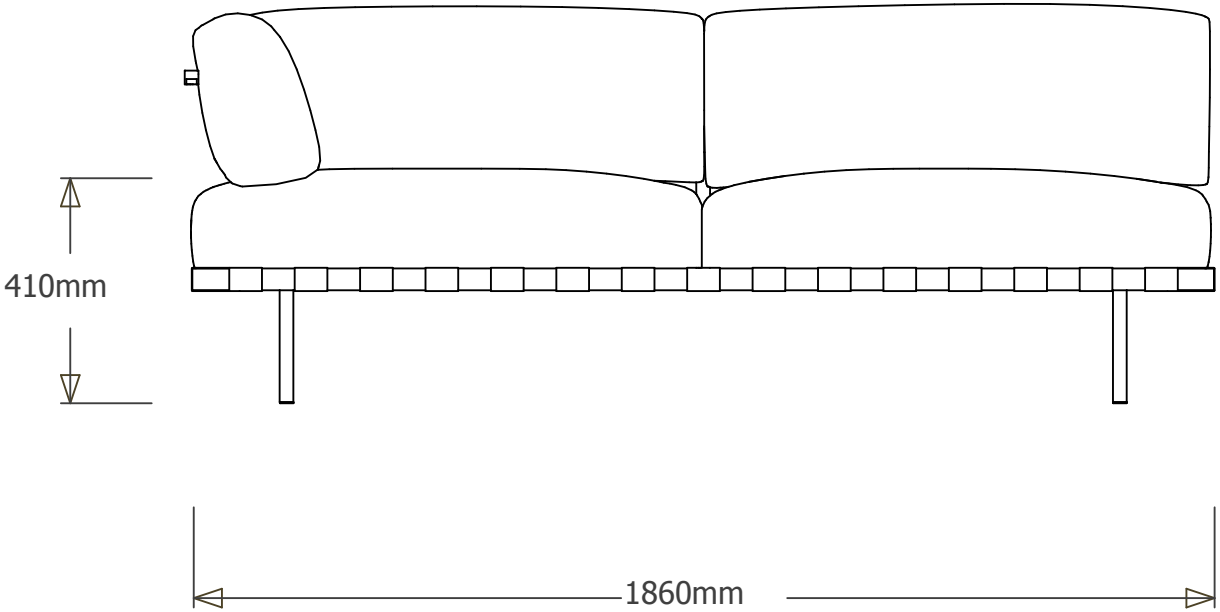
410mm
1860mm

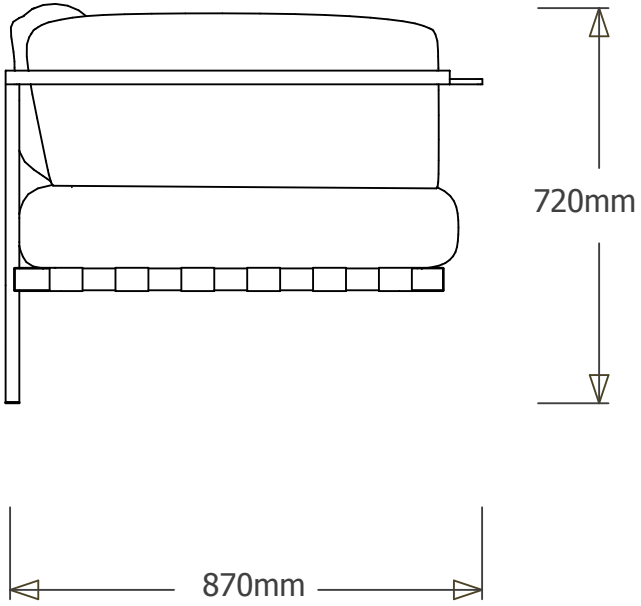
720mm
870mm

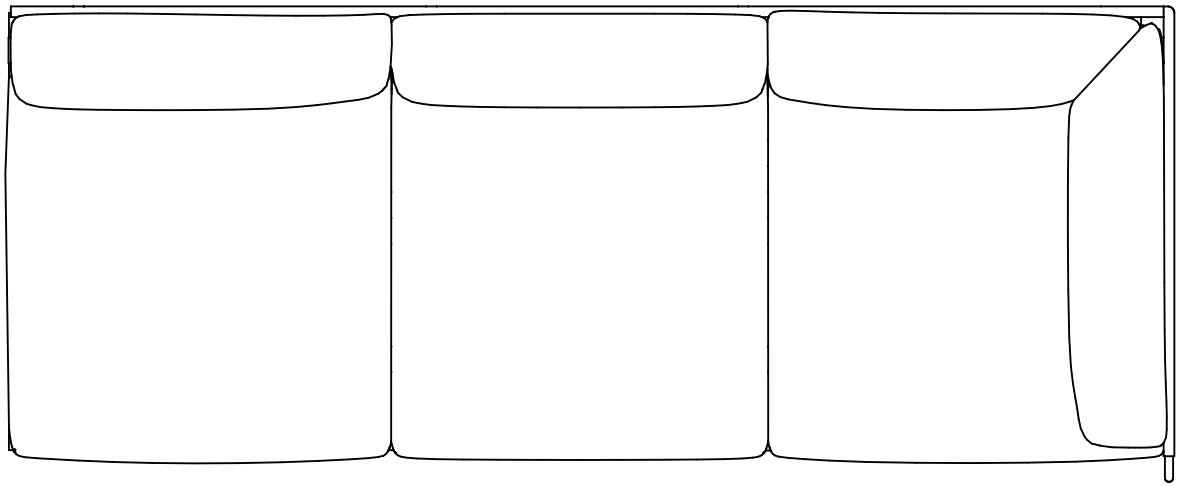

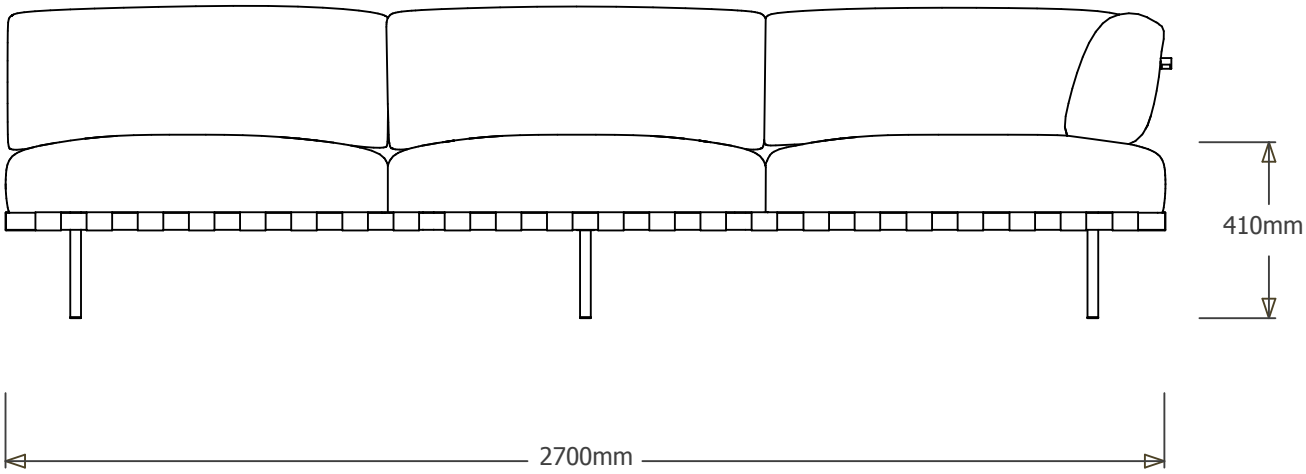
410mm
2700mm

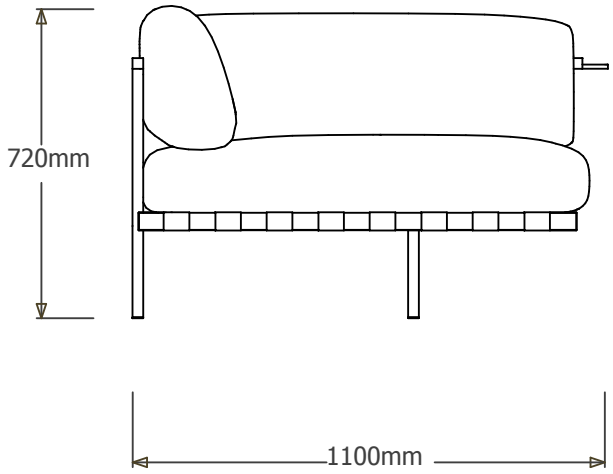
720mm
1100mm

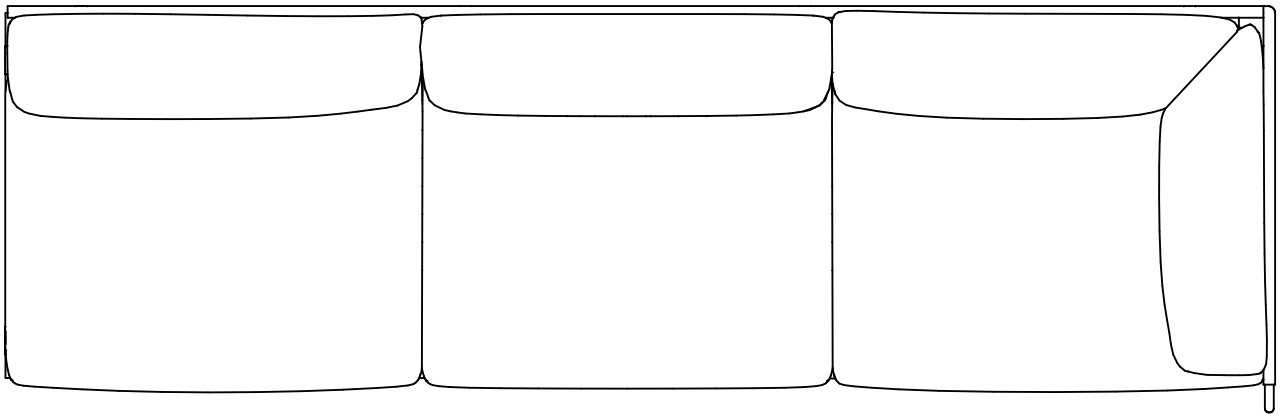

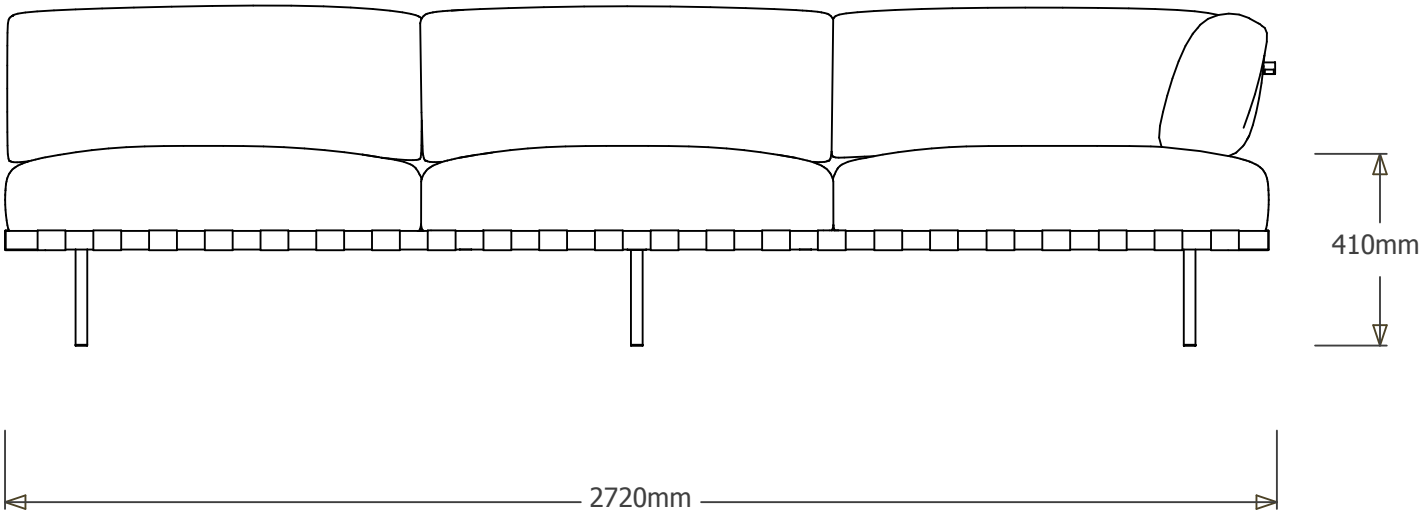
410mm
2720mm

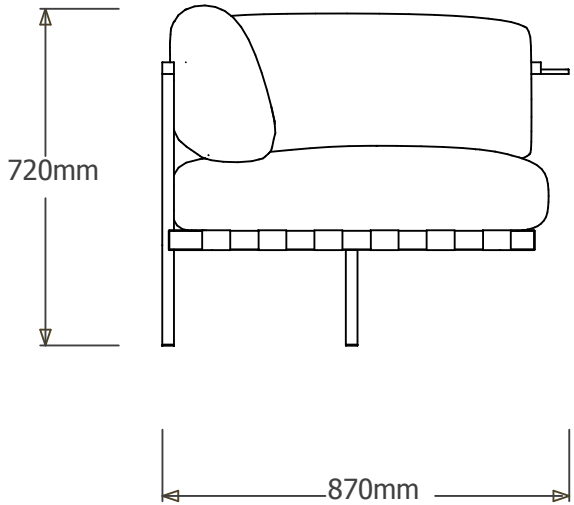
720mm
870mm

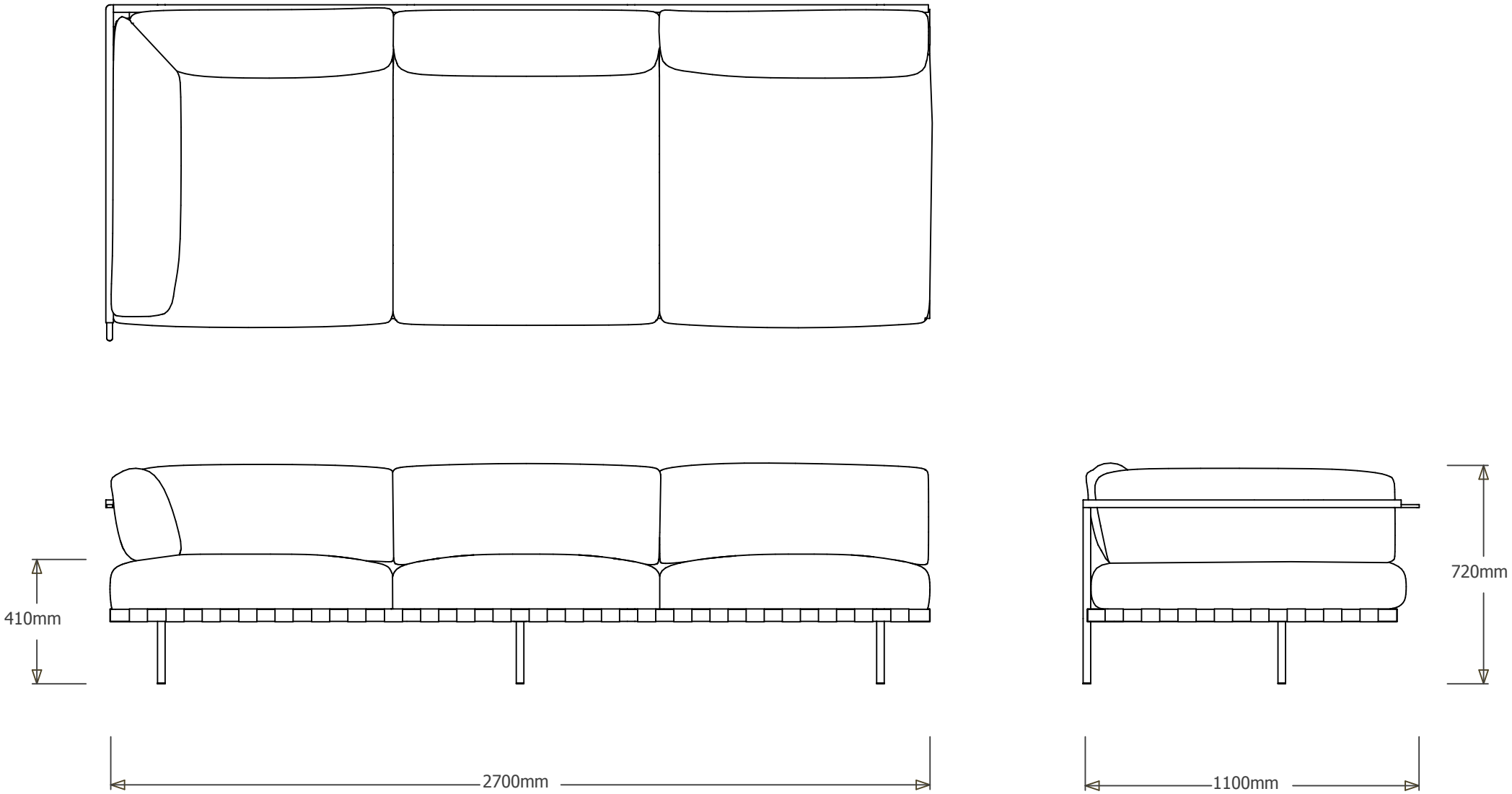
410mm
720mm
2700mm
1100mm

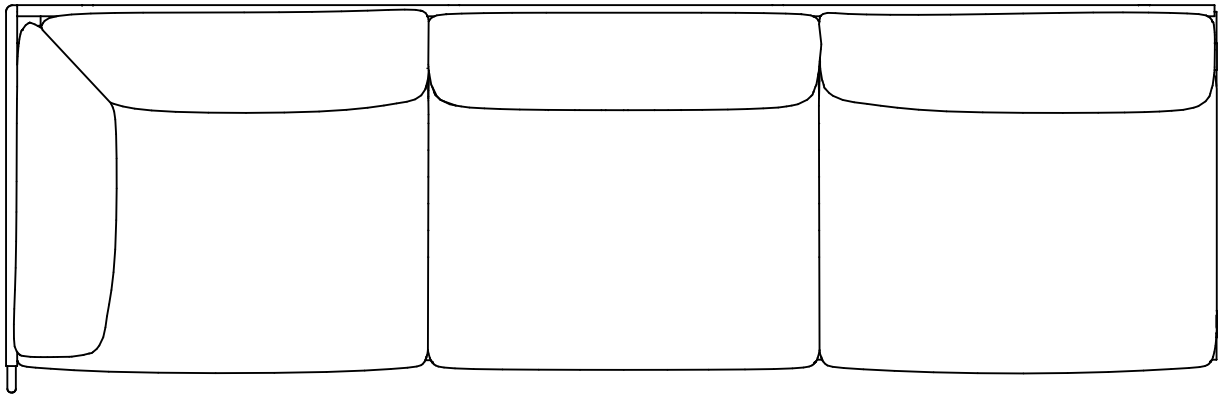

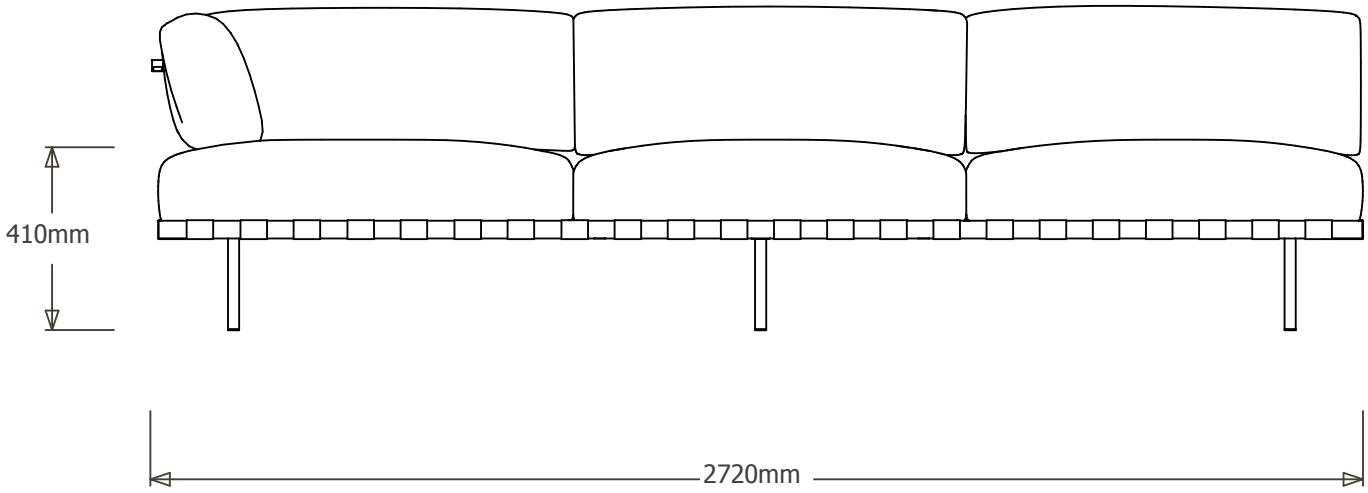
410mm
2720mm

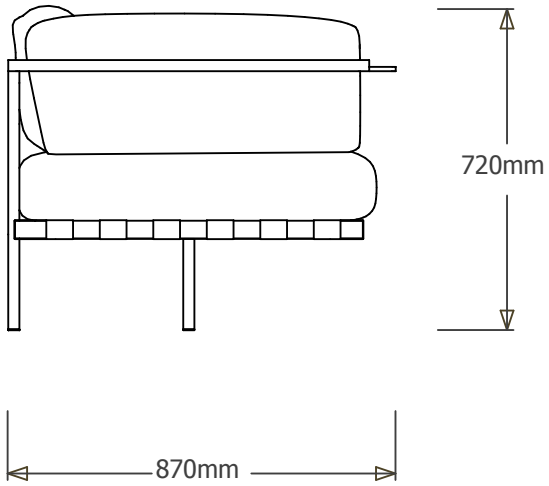
720mm
870mm

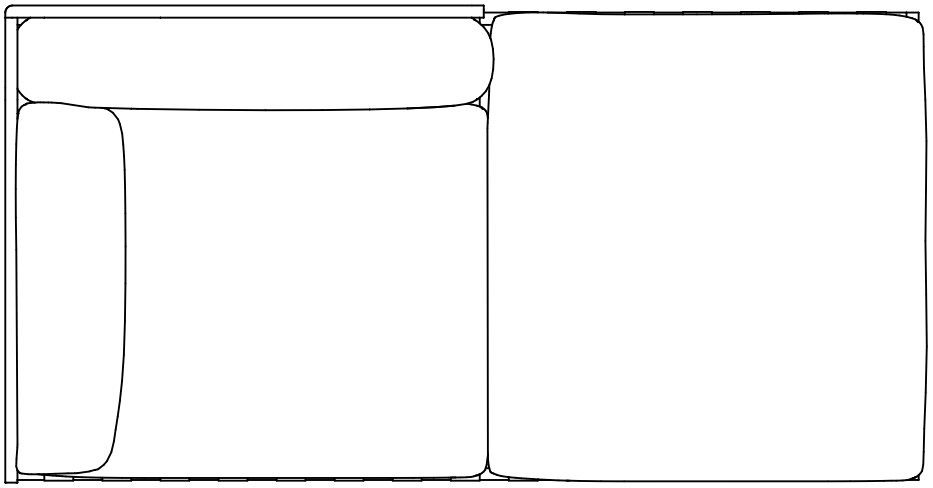

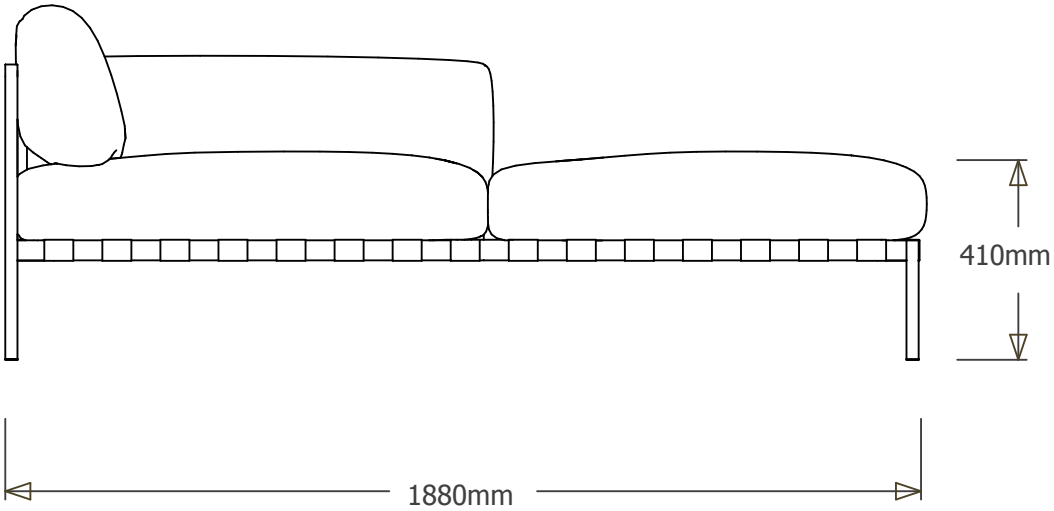
410mm
1880mm

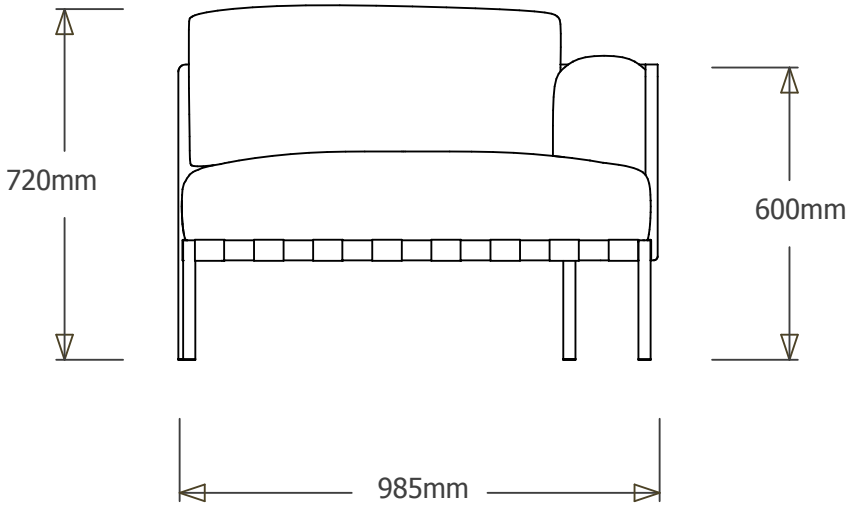
720mm
600mm
985mm

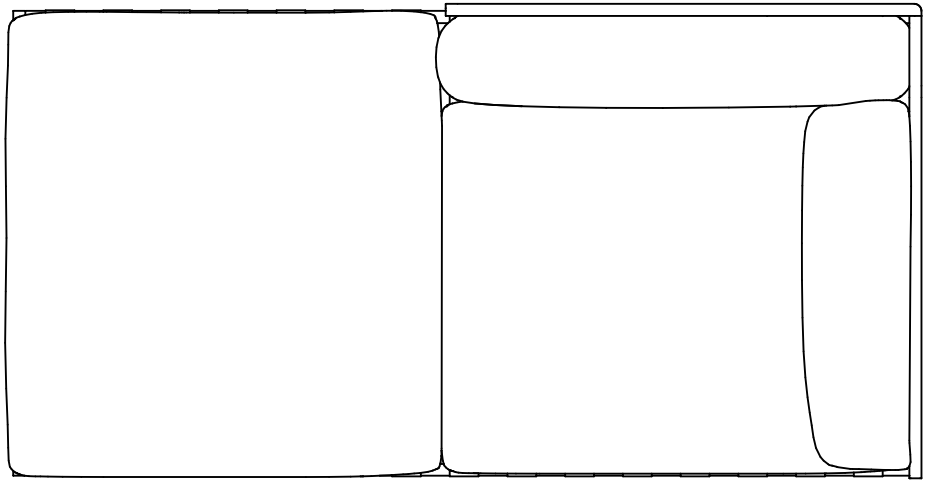

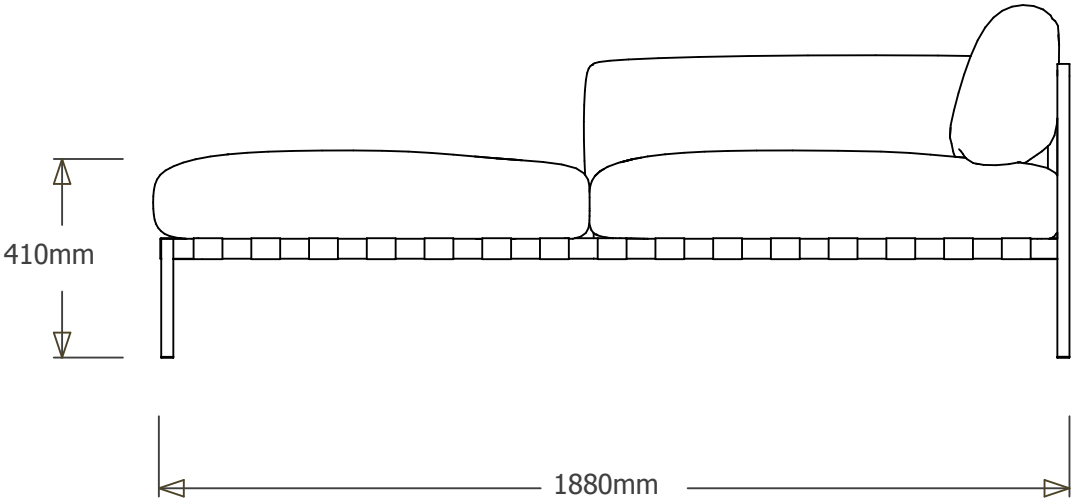
410mm
1880mm

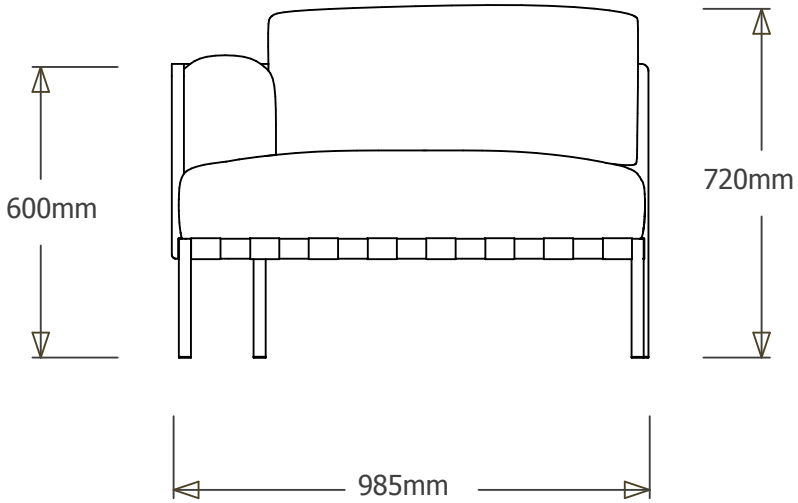
600mm
720mm
985mm

NATAL ALU SOFA

05809S

05829S

05839LS

05839RS

05849LS

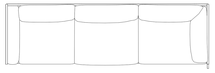
05849RS

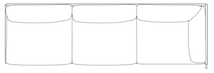
05859LS

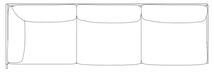
05859RS

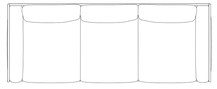
05809D

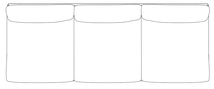
05829D

05839LD

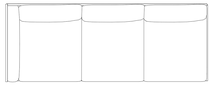
05839RD

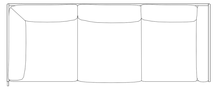
05849LD

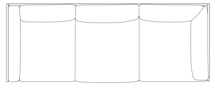
05849RD

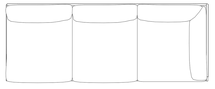
05859LD

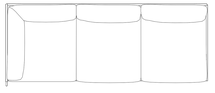
05859RD

05838RS

05838LS

05808S

05828S

05848LS

05848RS

05858LS

05858RS

05838RD

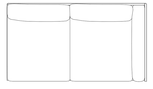
05838LD

05808D

05828D

05848LD

05848RD

05858LD

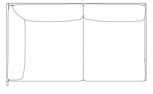
05858RD

05804

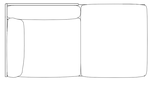
05803

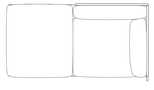
05869

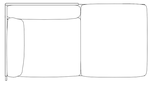
05868

05802S

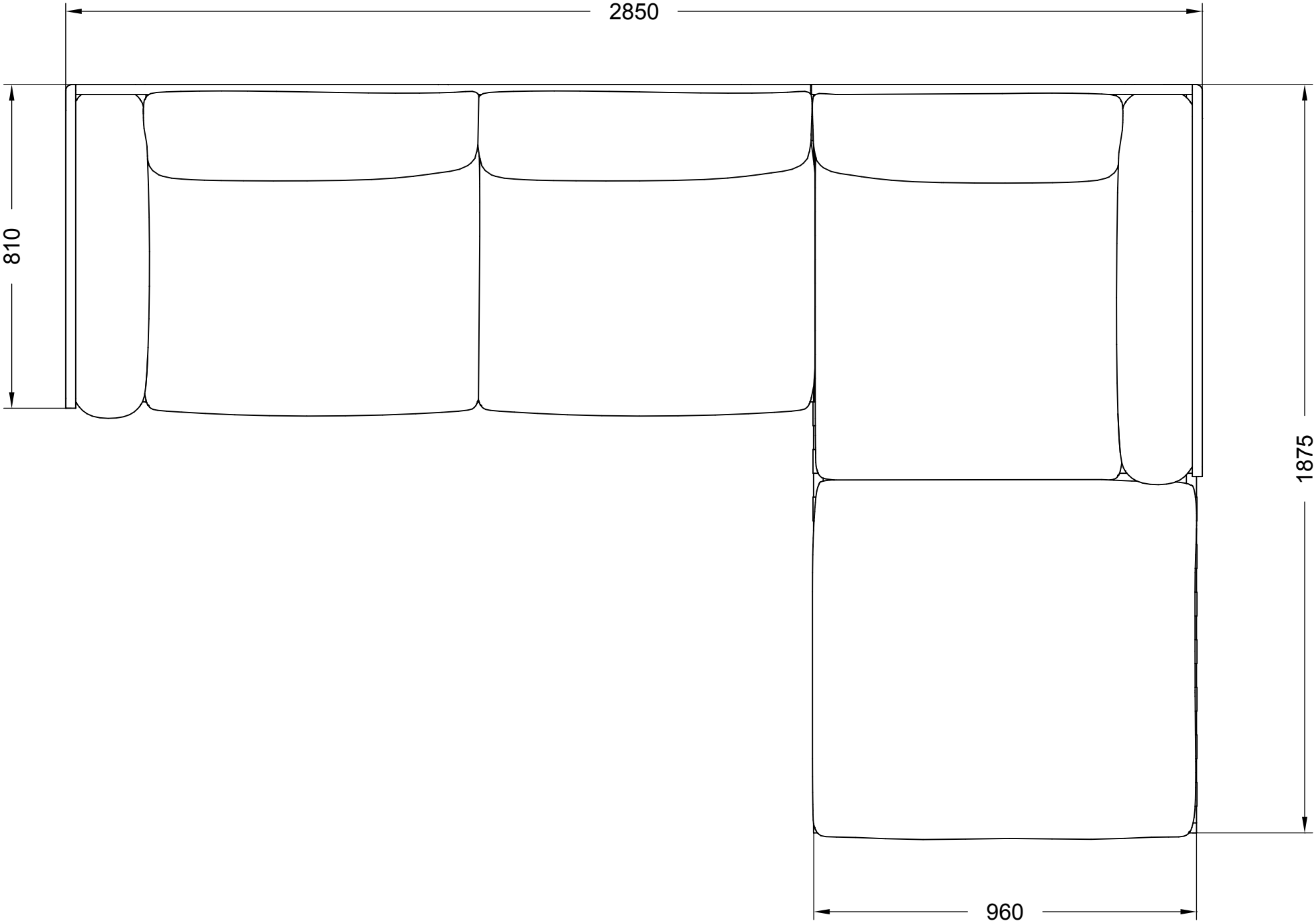
2850
810
1875
960

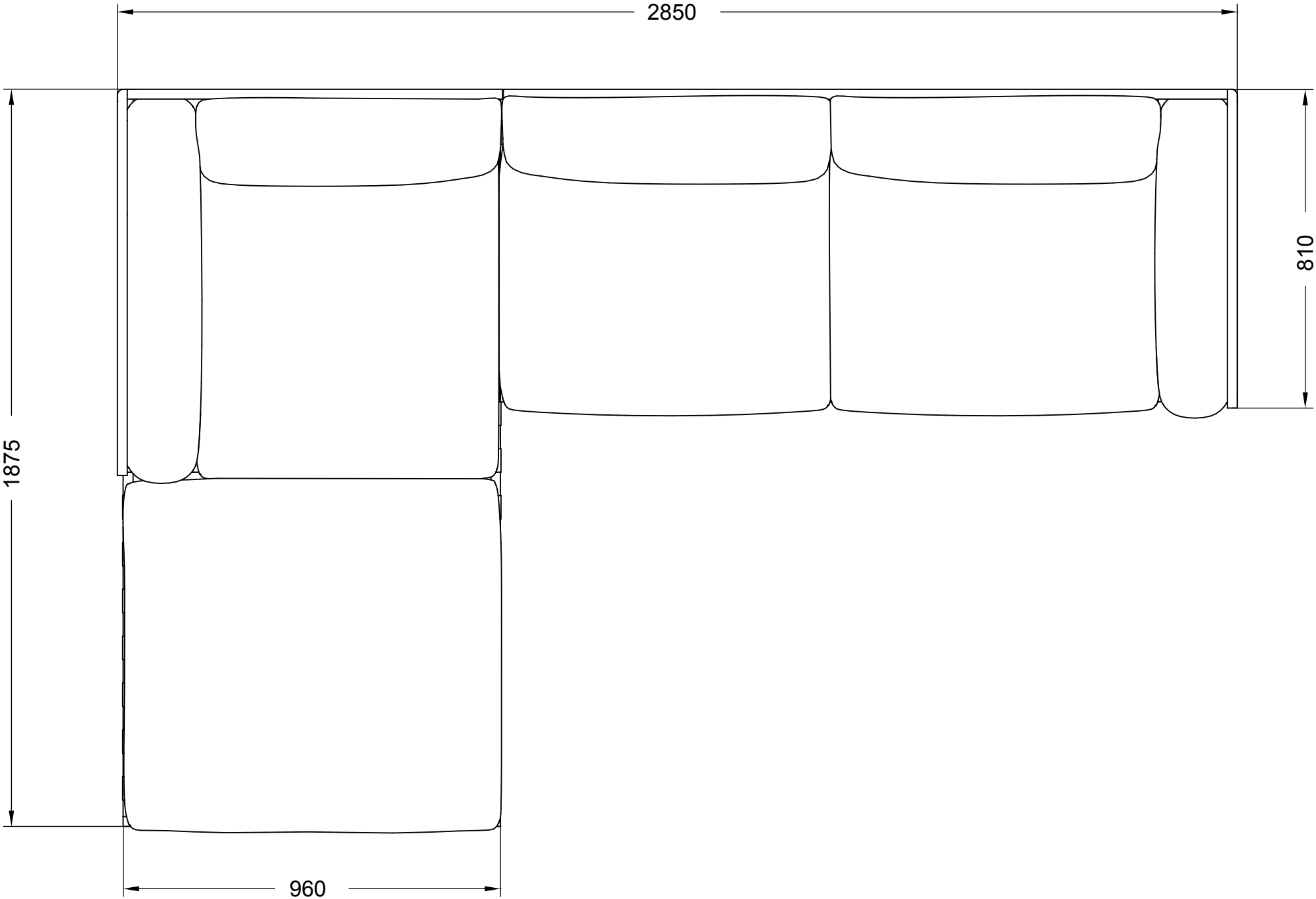
2850
810
1875
960

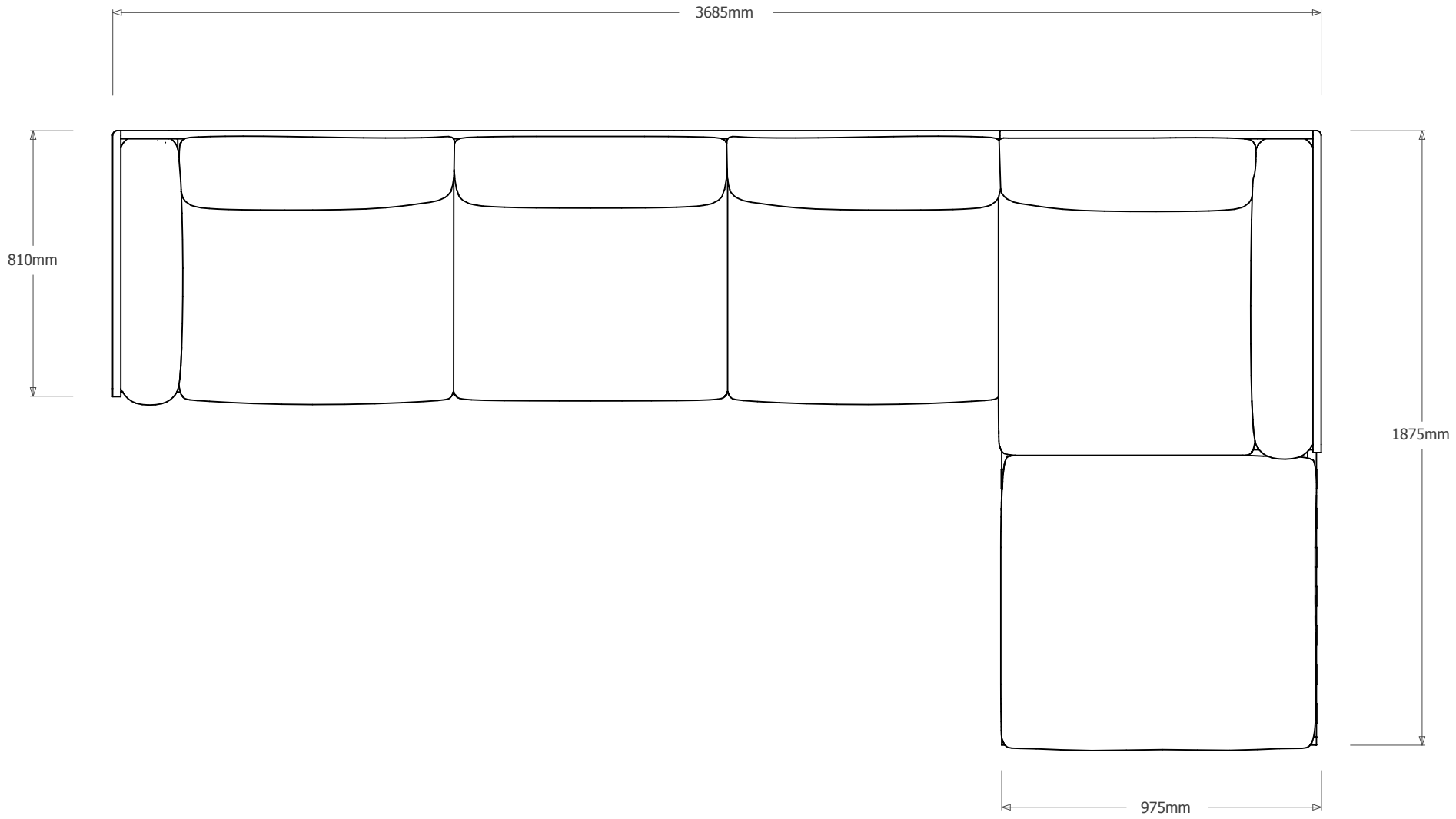
3685mm
810mm
1875mm
975mm

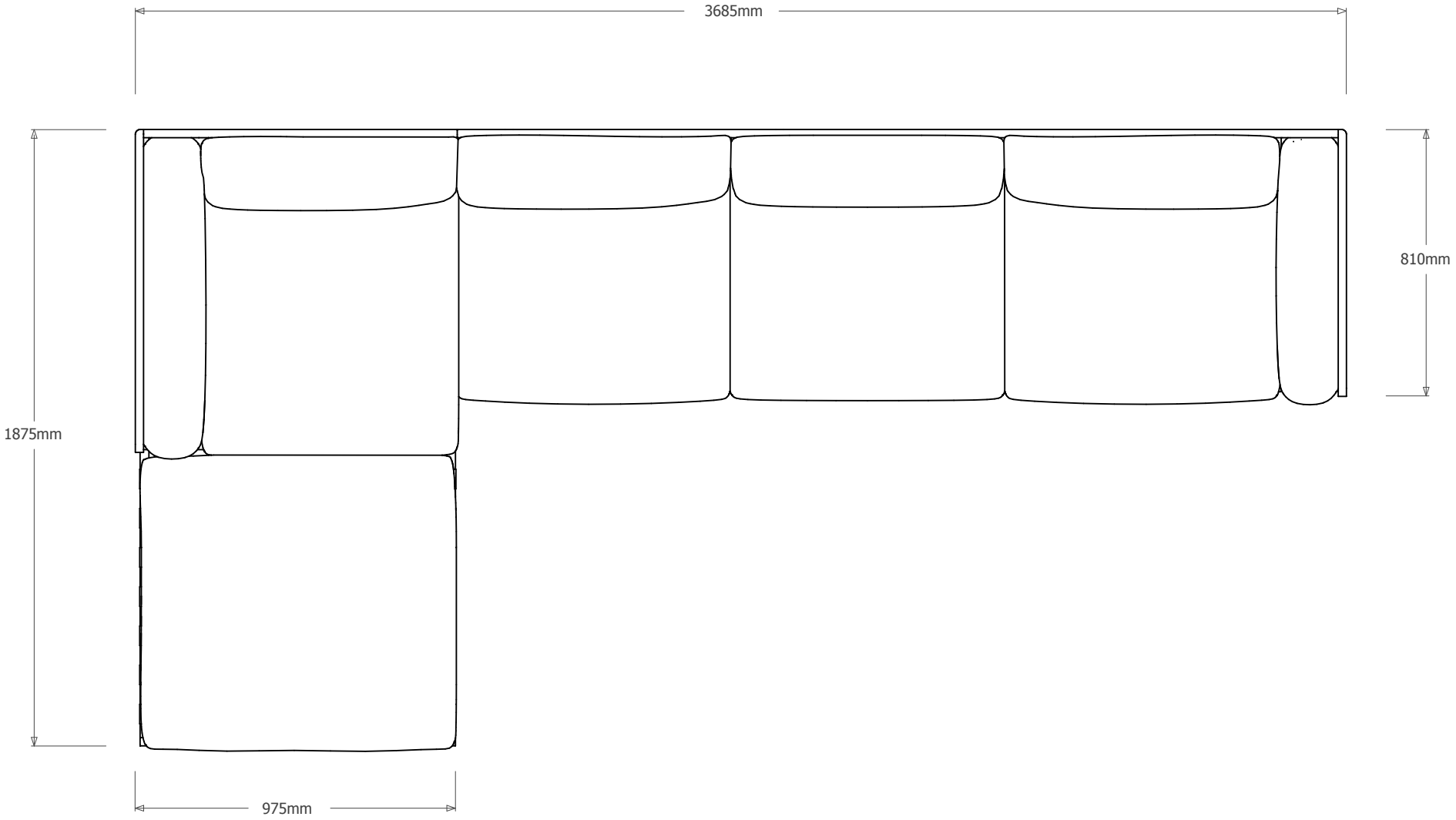
3685mm
810mm
1875mm
975mm

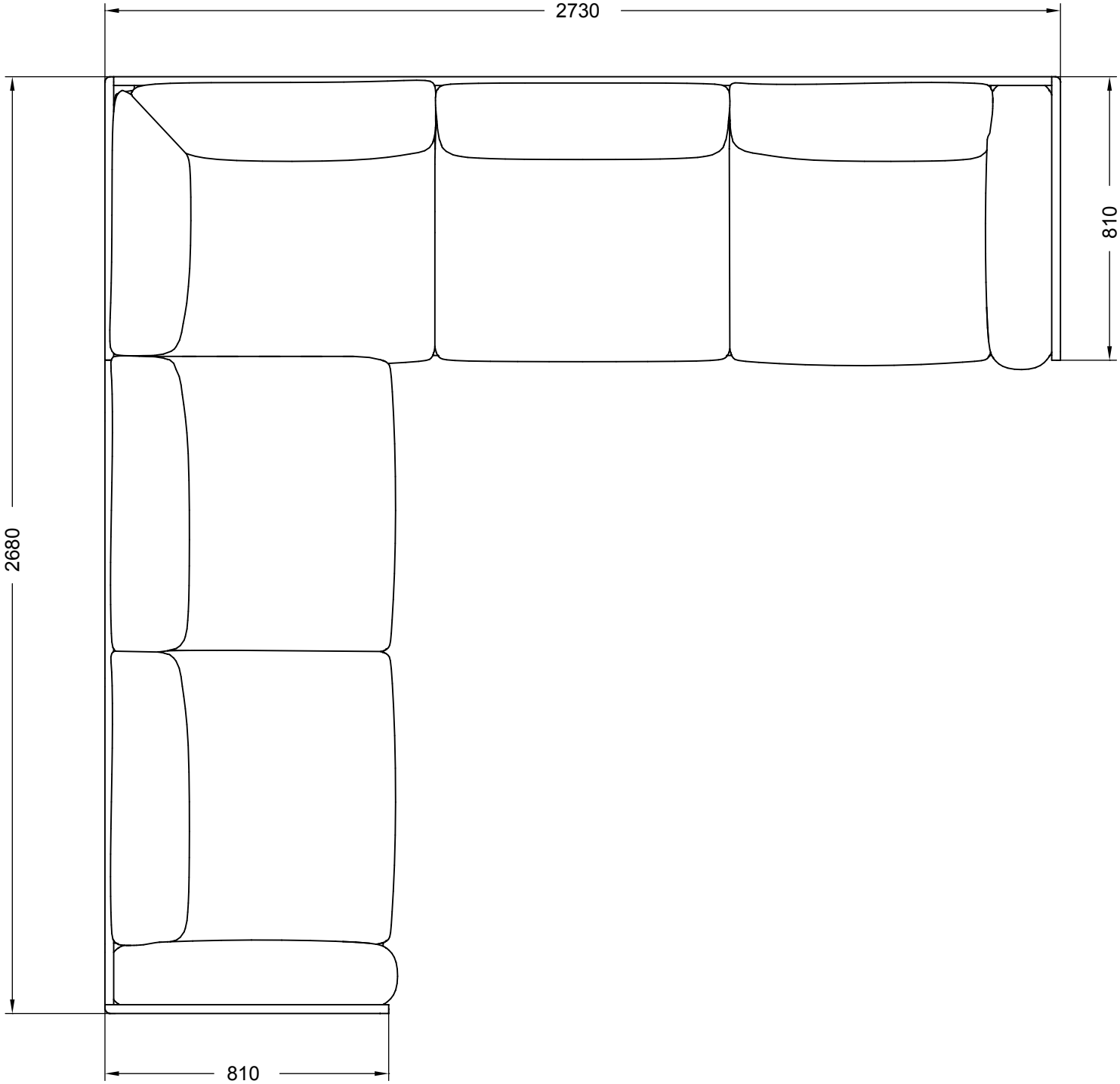
2730
810
2680
810

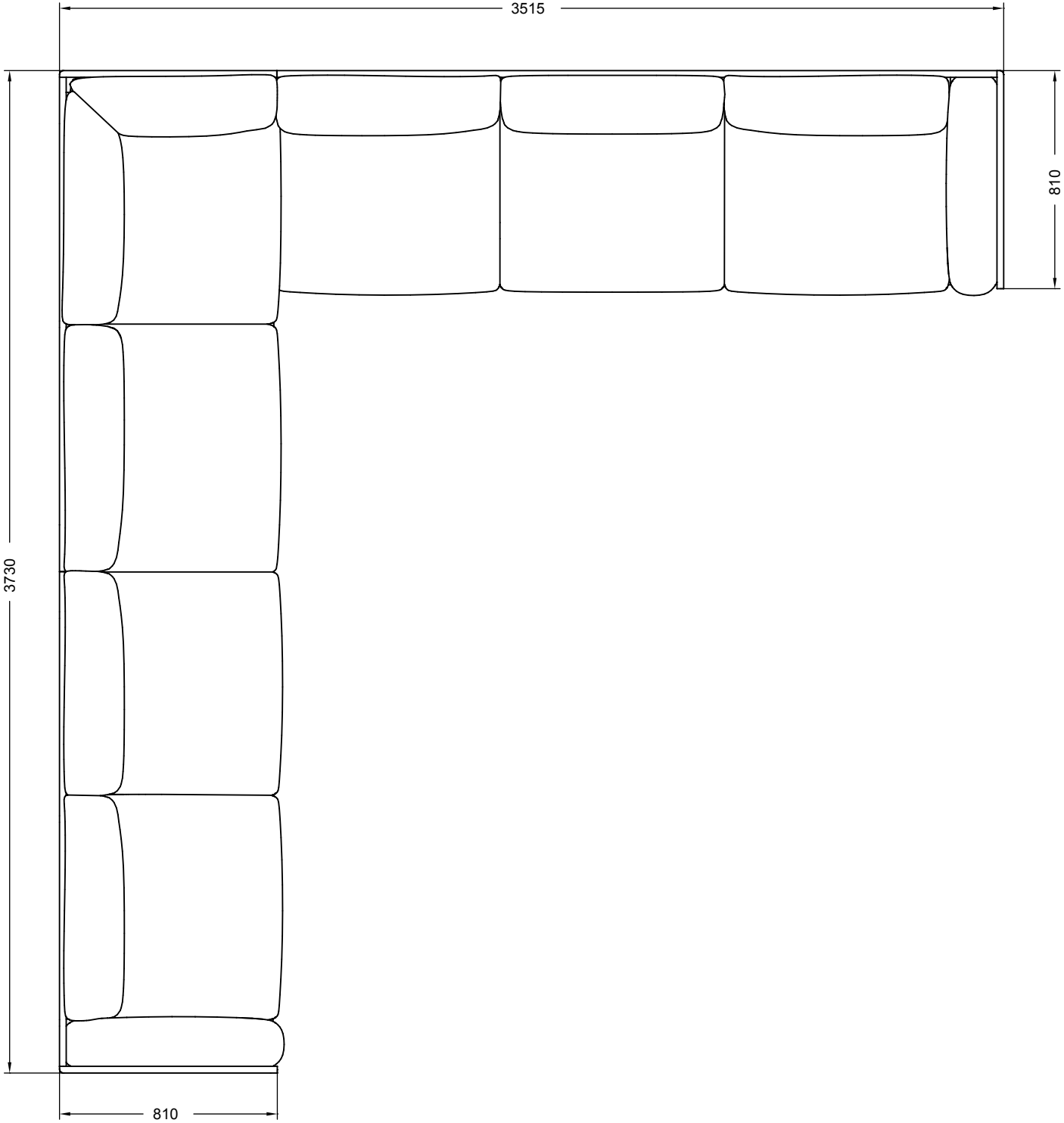
3515
810
3730
810

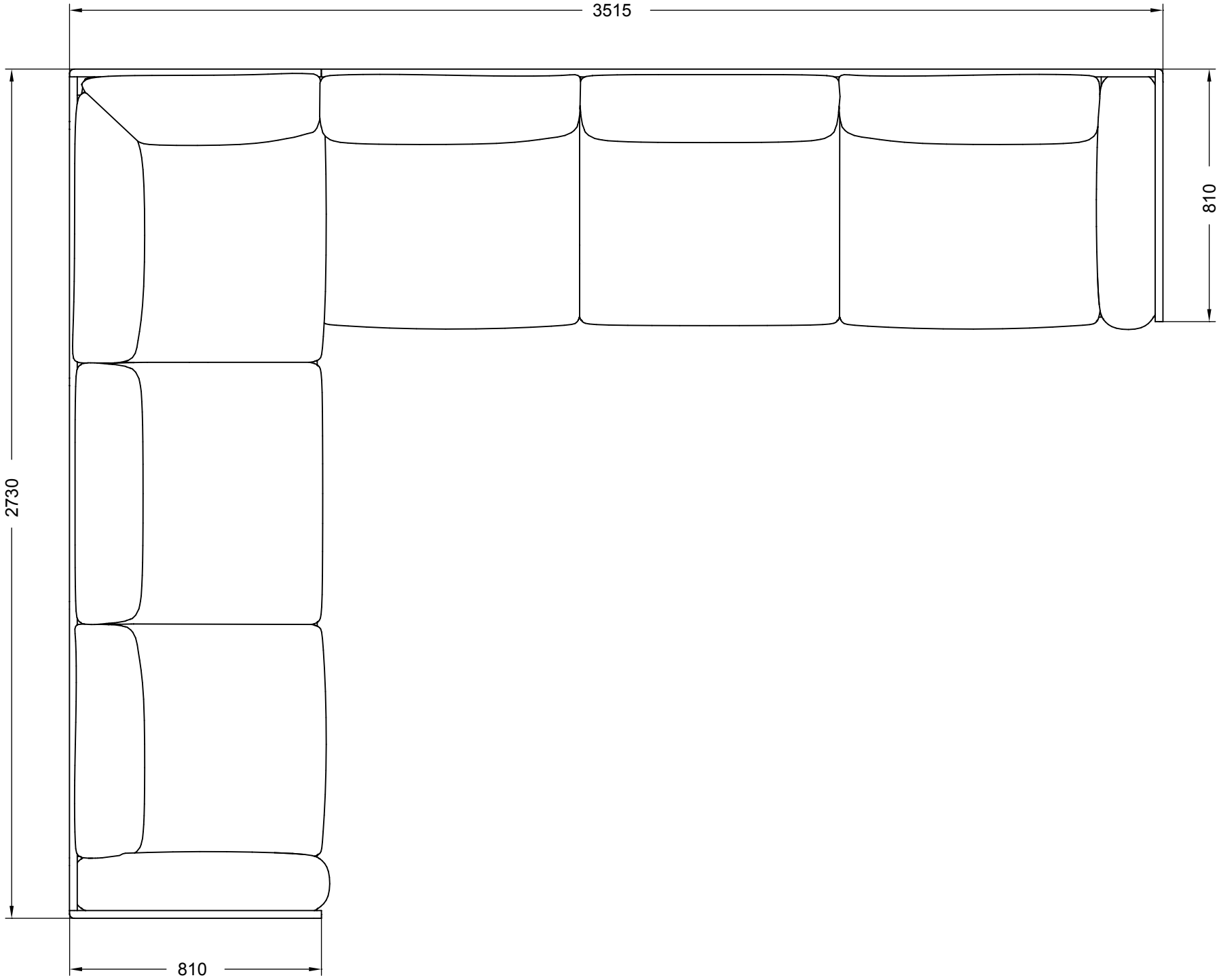
3515
810
2730
810

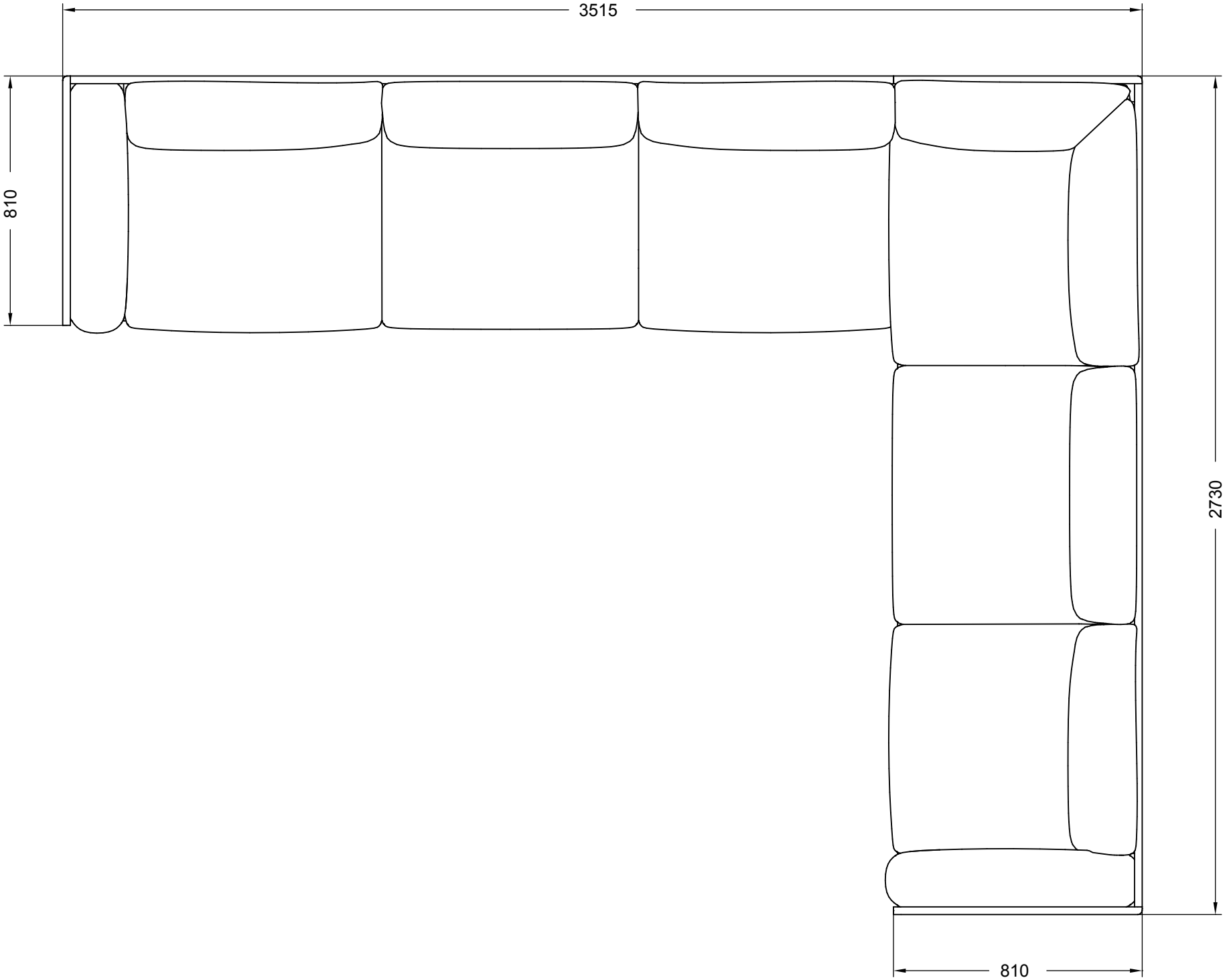
3515
810
2730
810

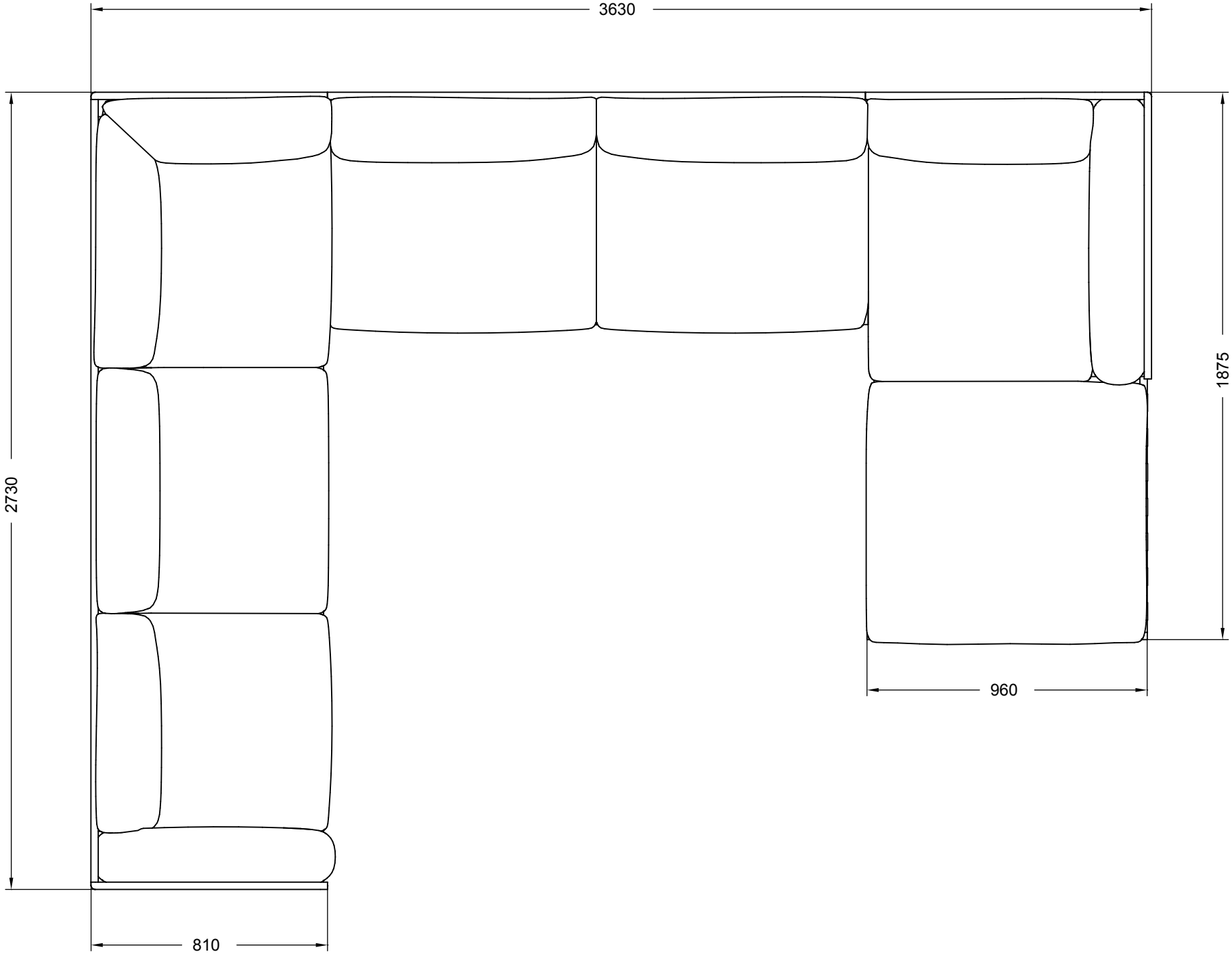
3630
2730
1875
960
810

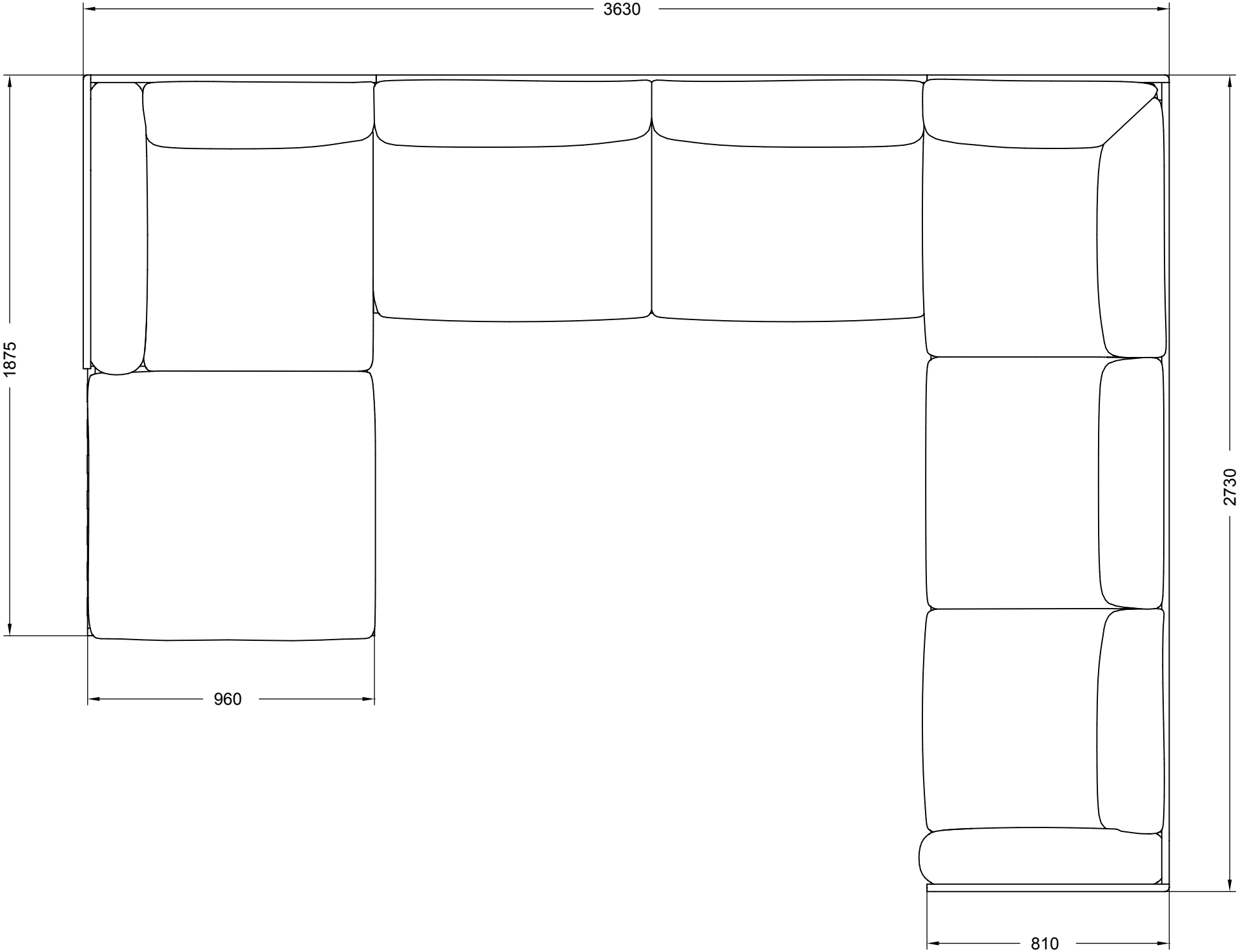
3630
1875
2730
960
810

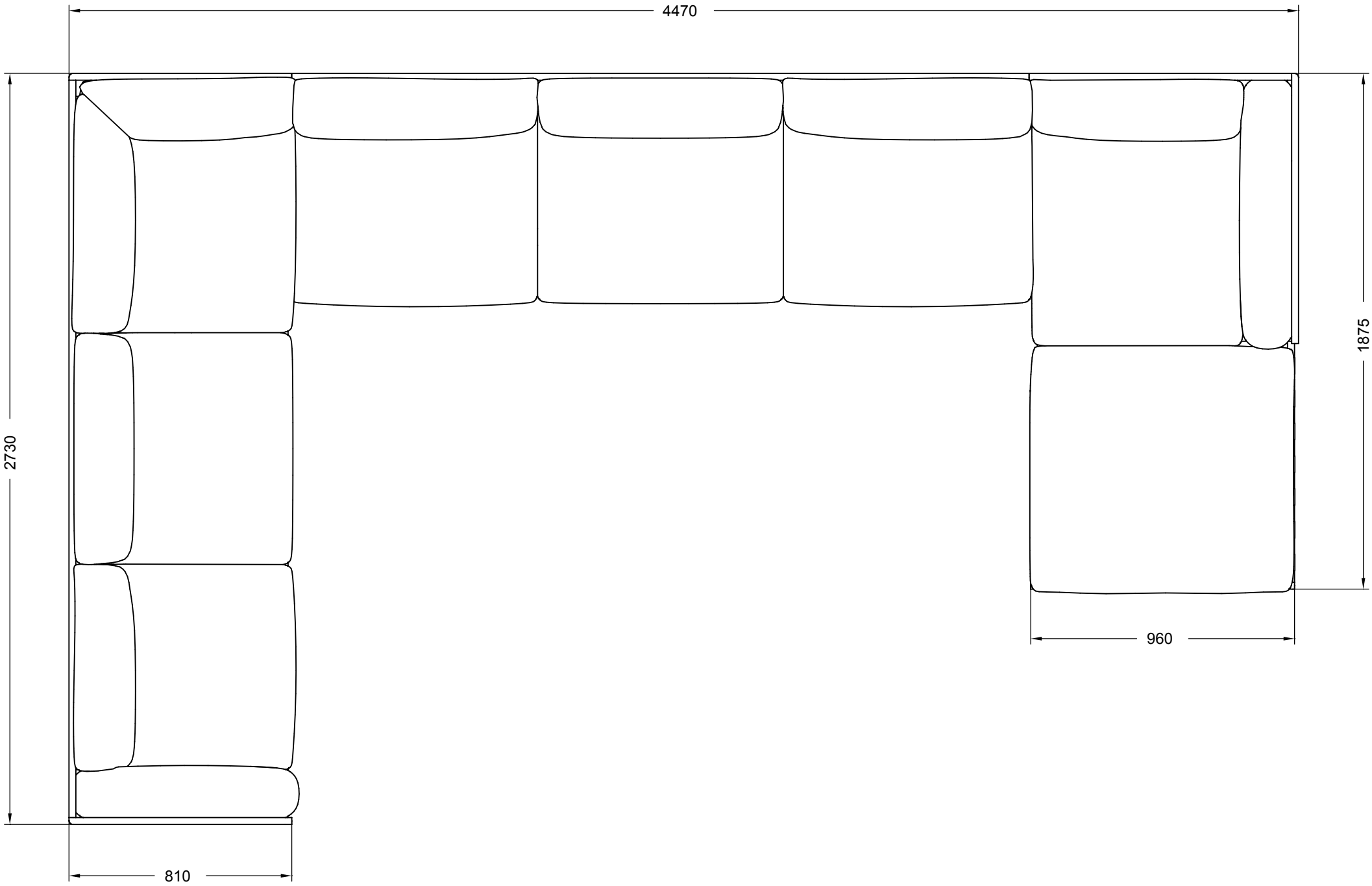
4470
2730
1875
960
810

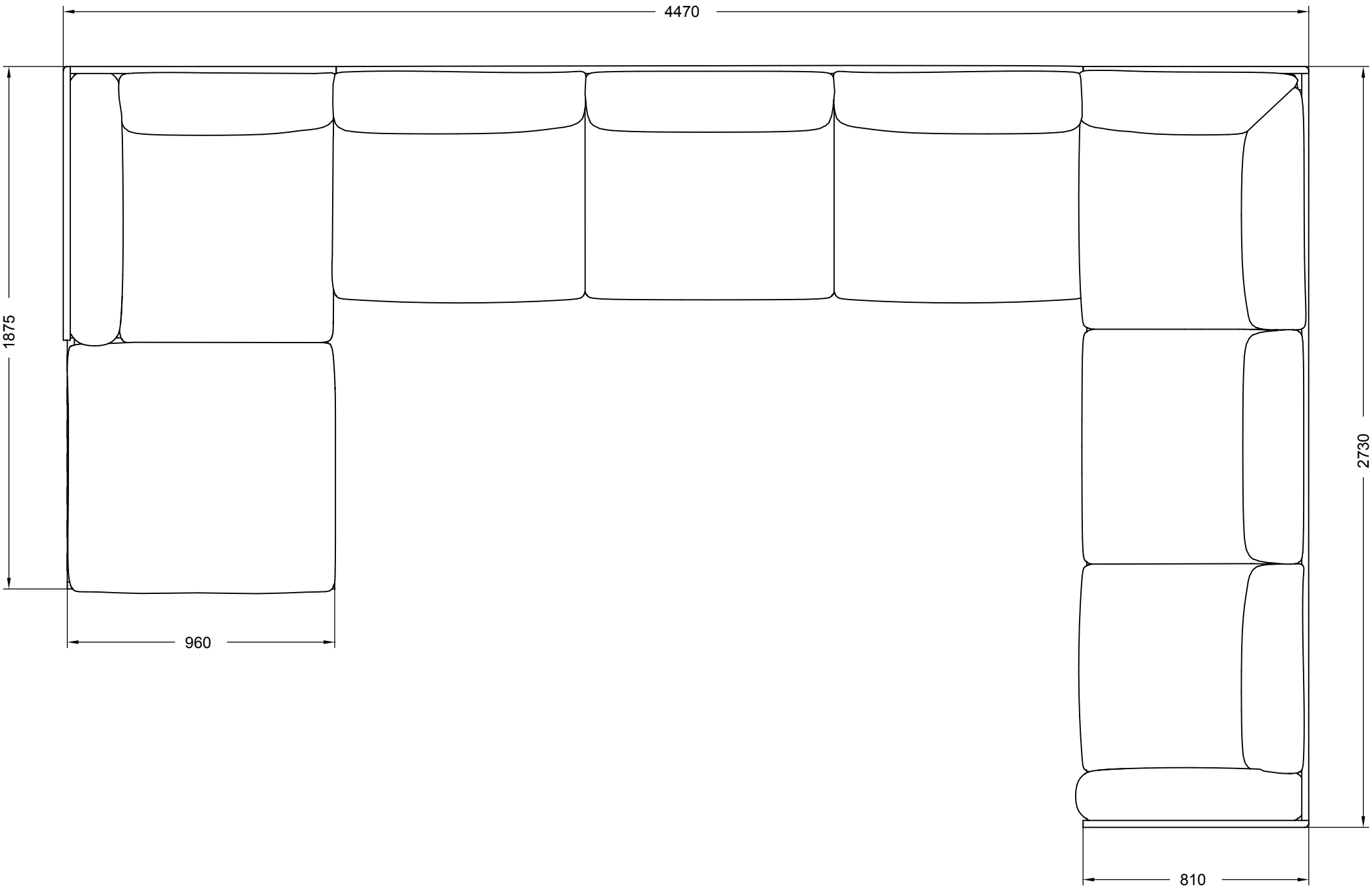
4470
1875
2730
960
810

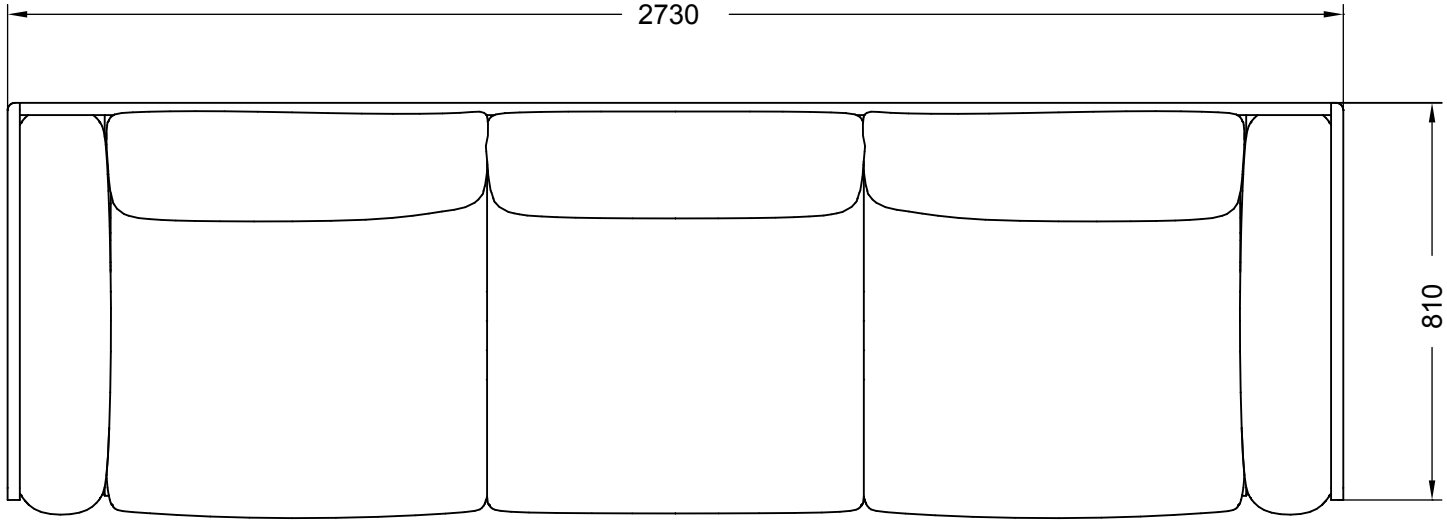
2730
810

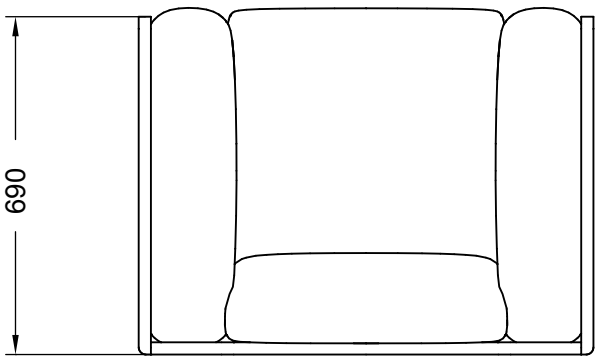
690

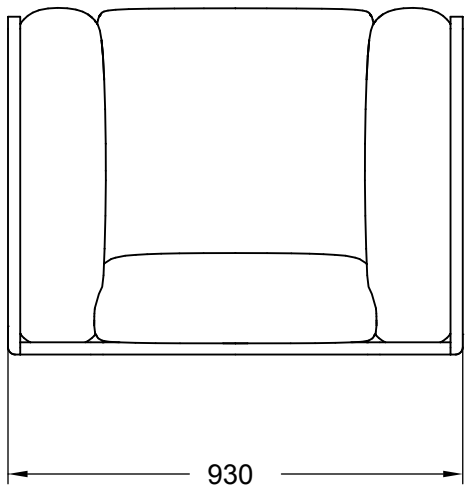
930

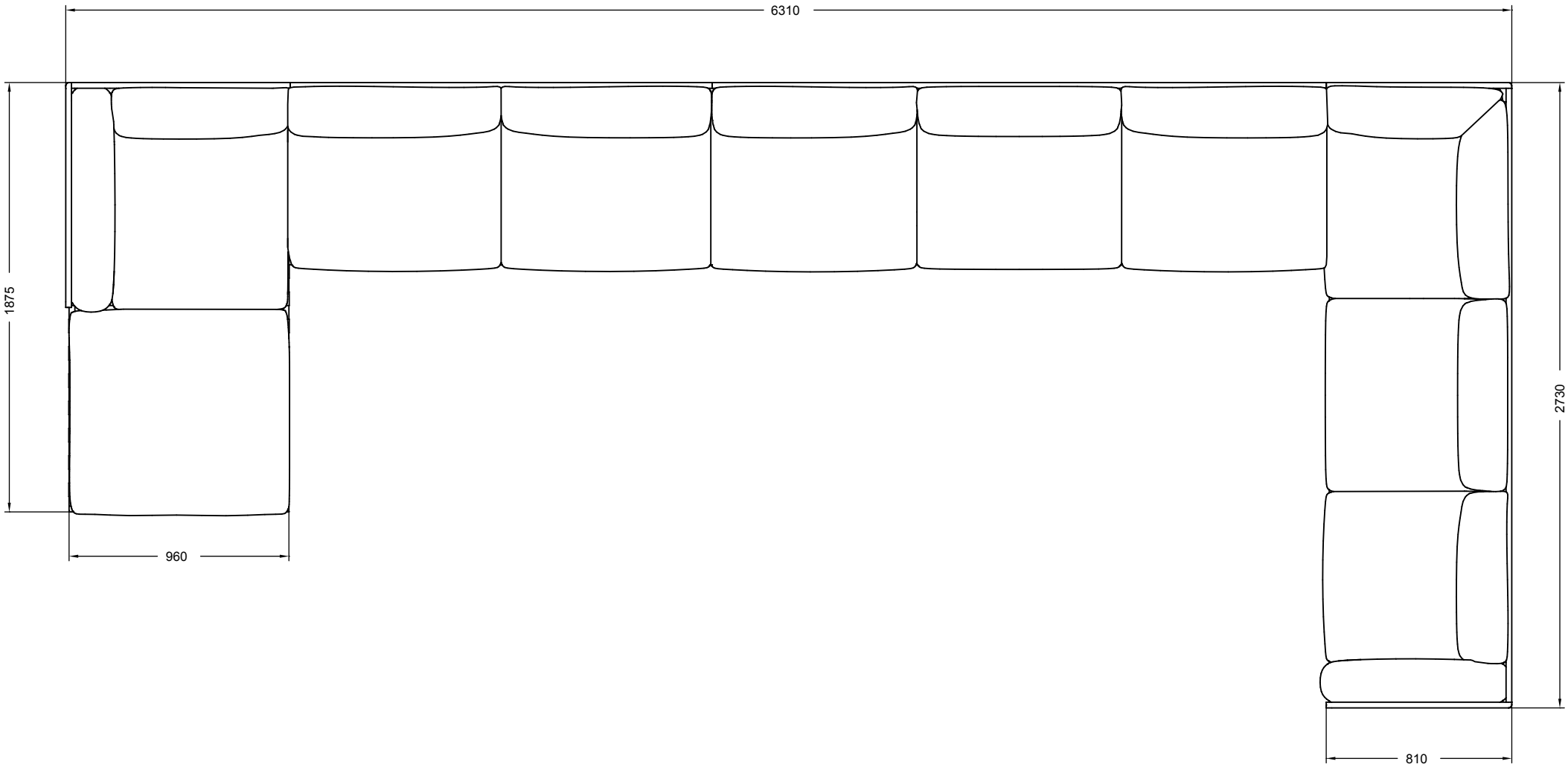
6310
1875
2730
960
810

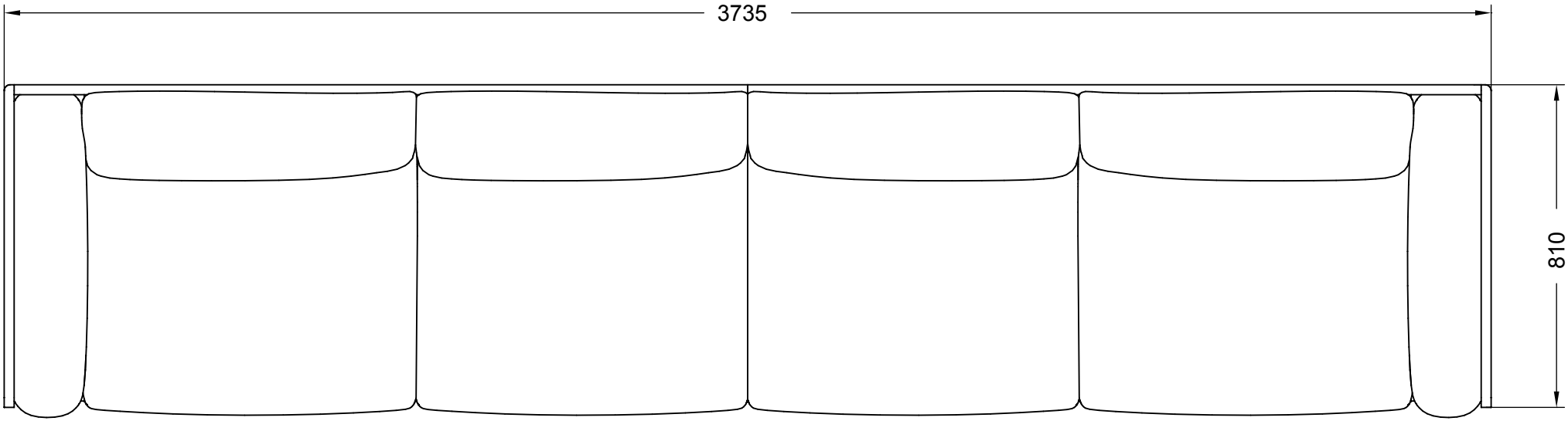
3735
810

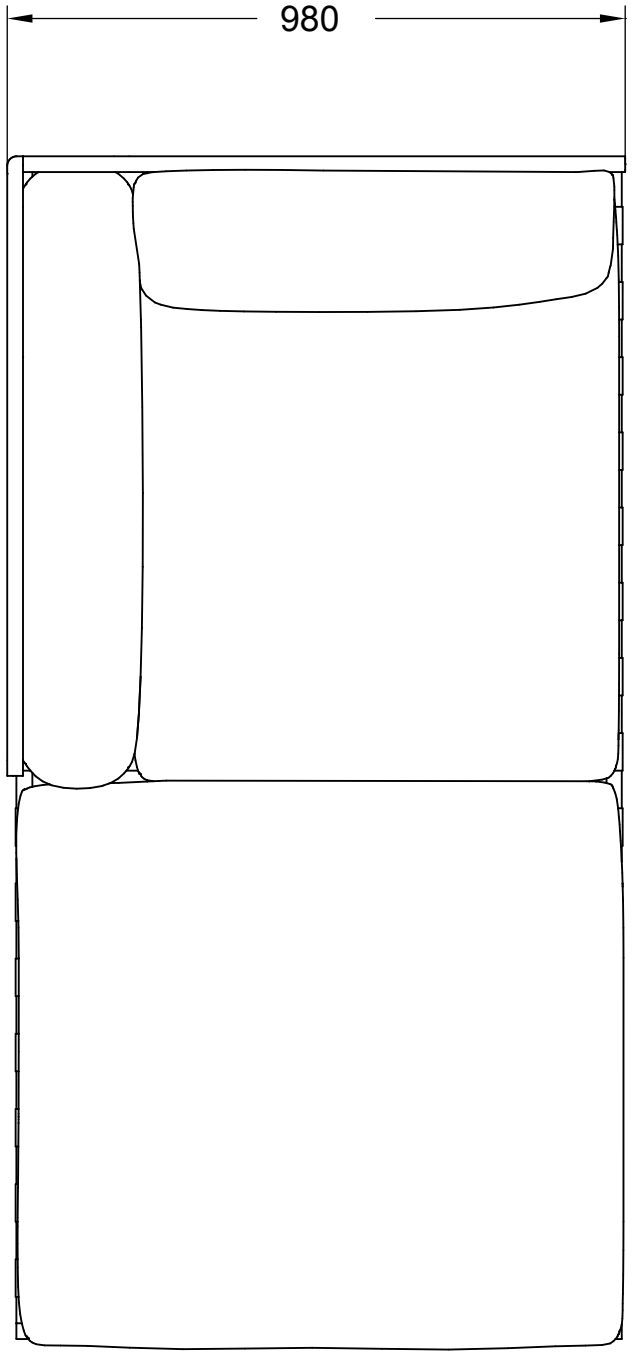
980

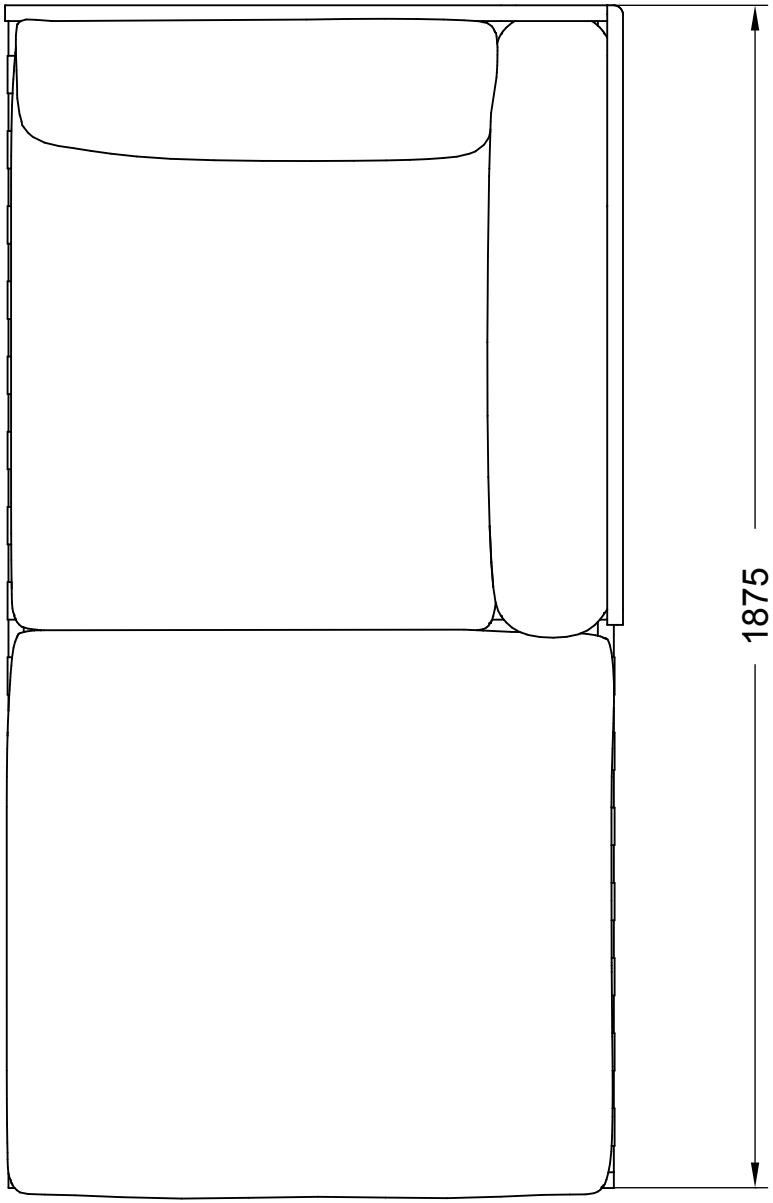
1875

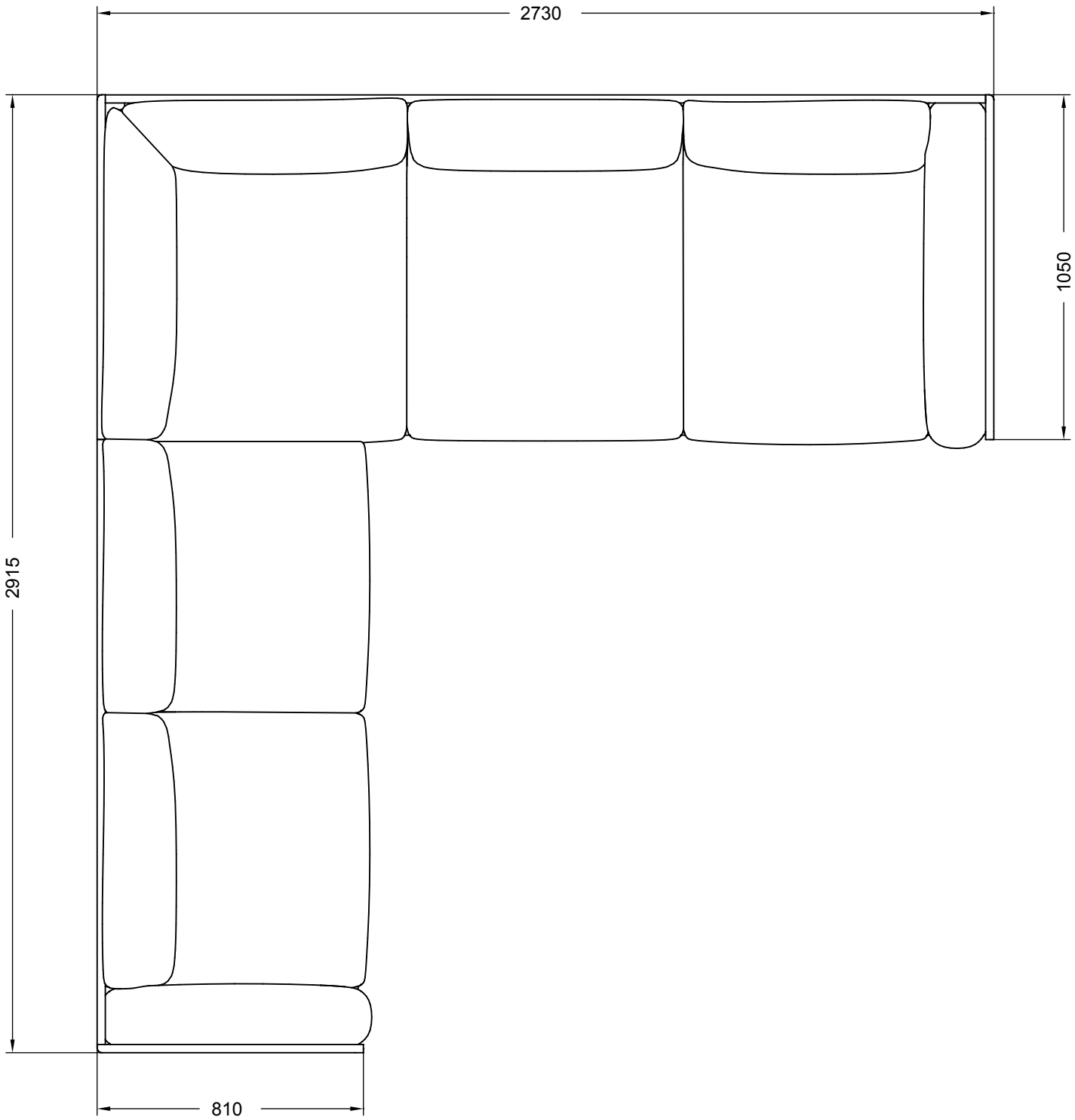
2730
1050
2915
810

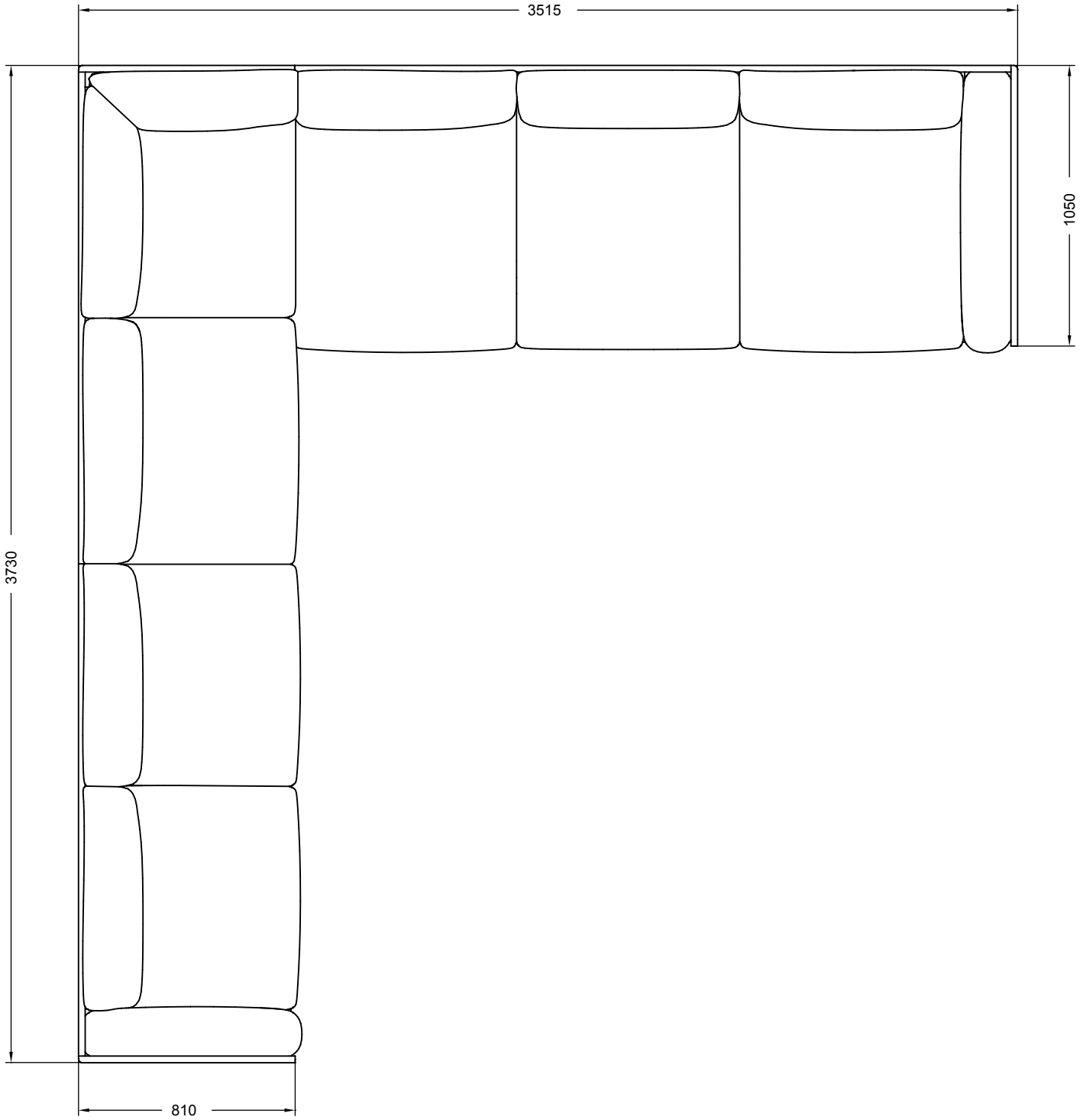
3515
1050
3730
810

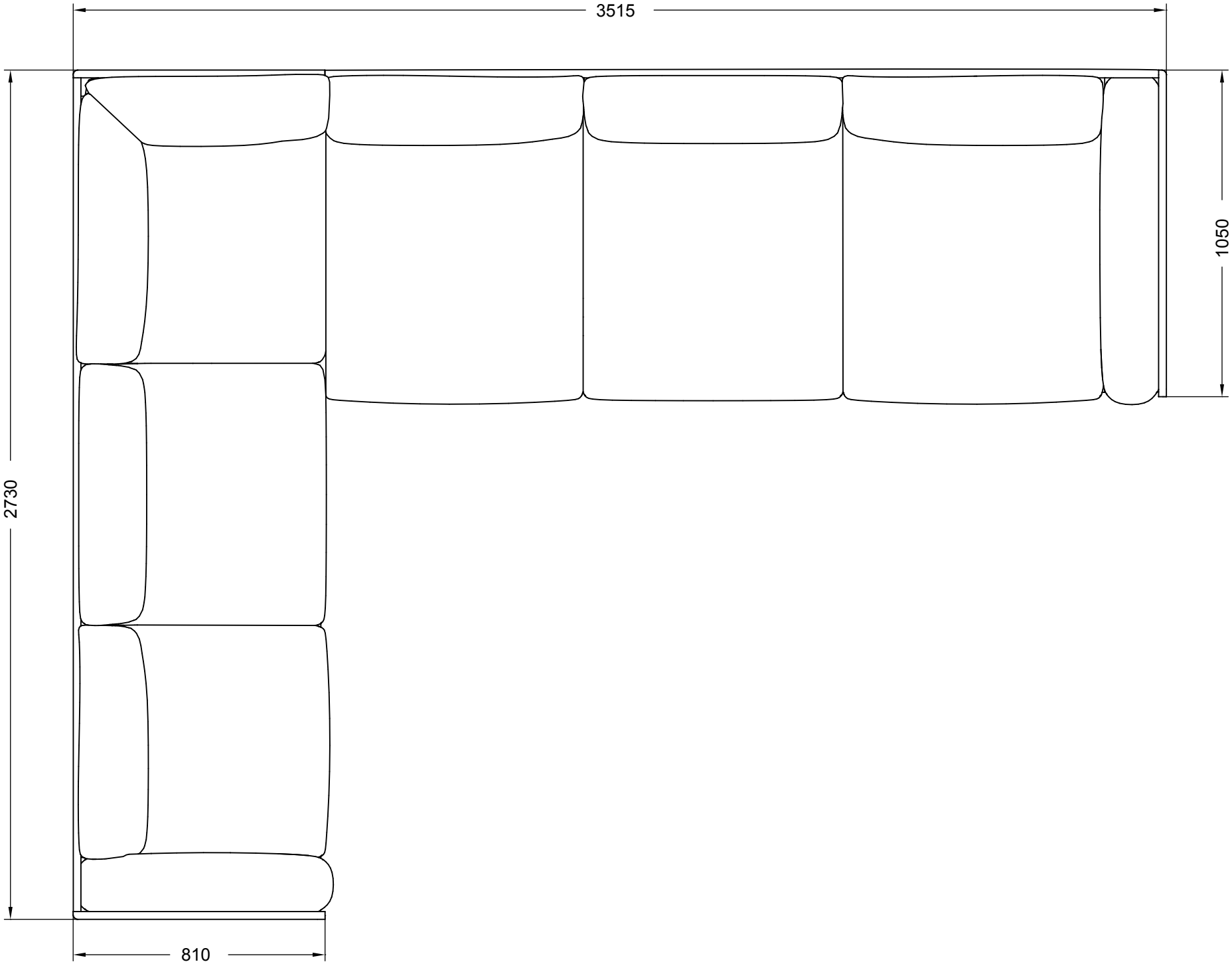
3515
1050
2730
810

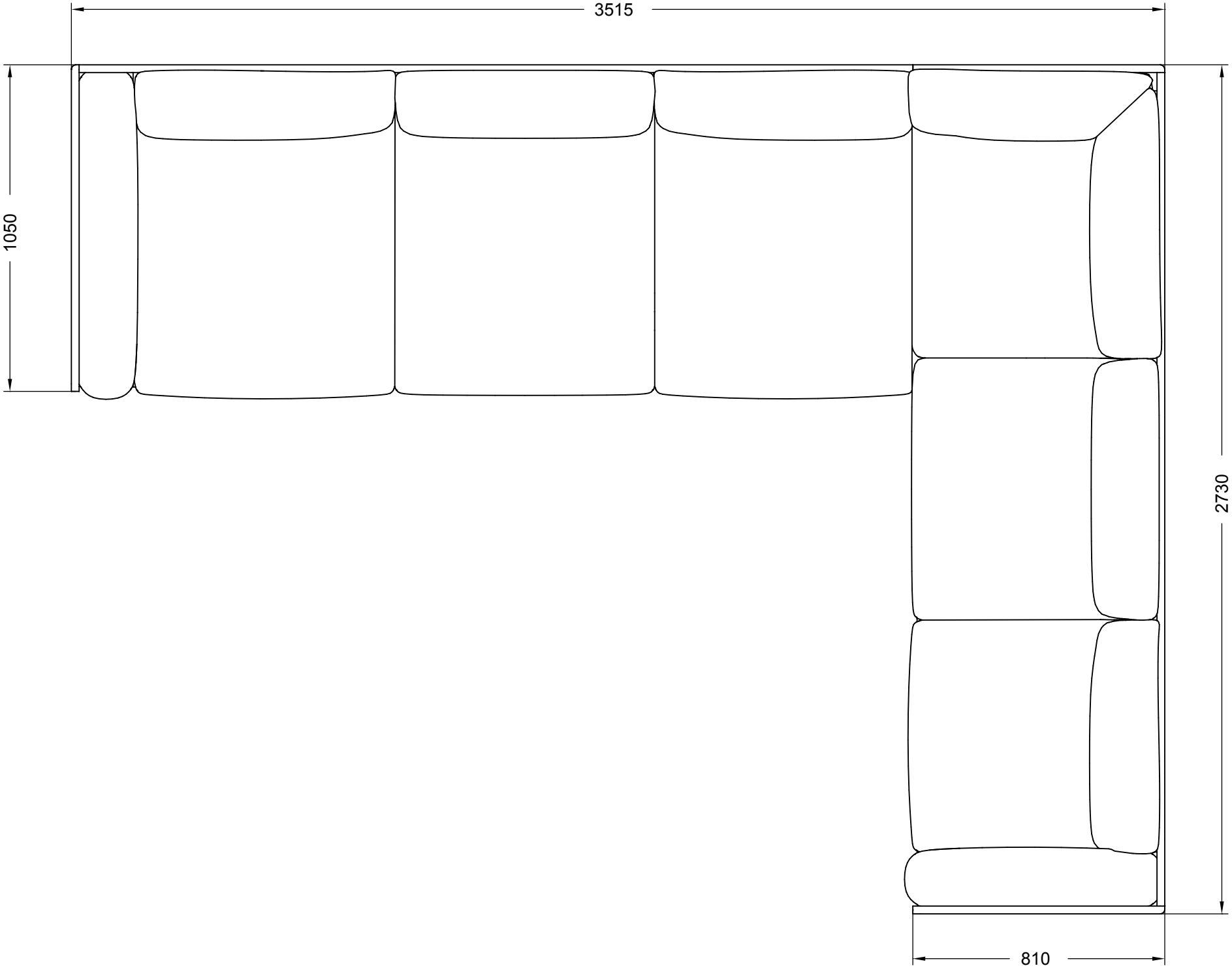
3515
1050
2730
810

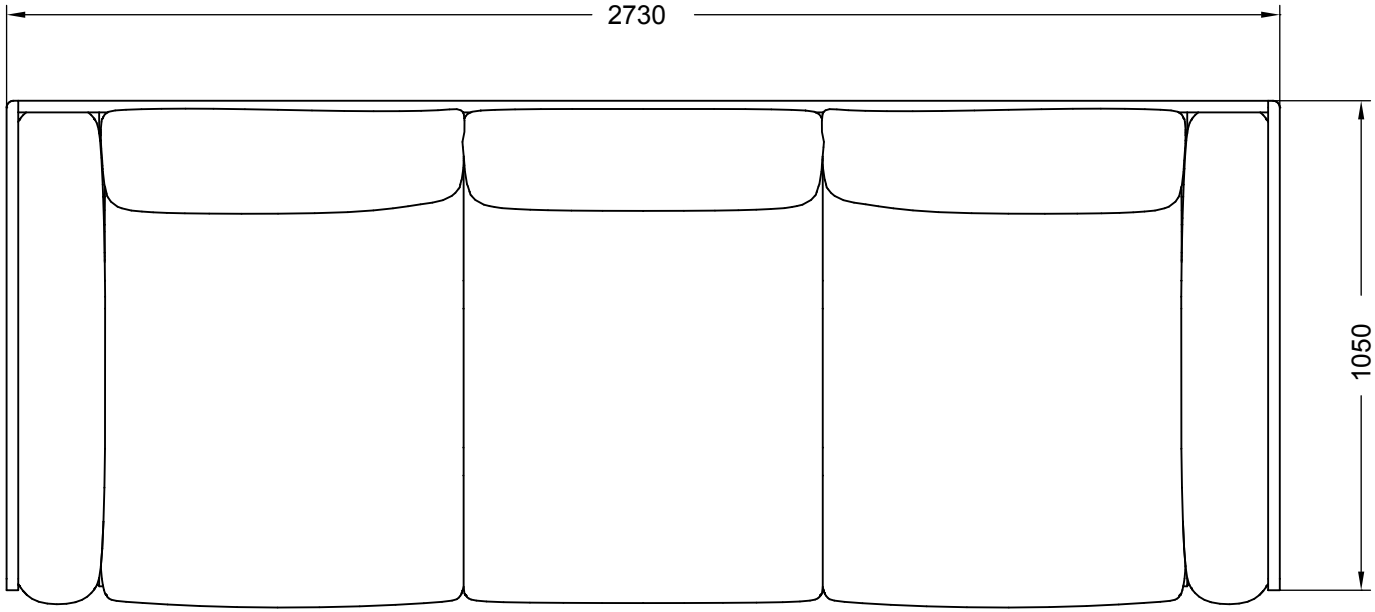
2730
1050

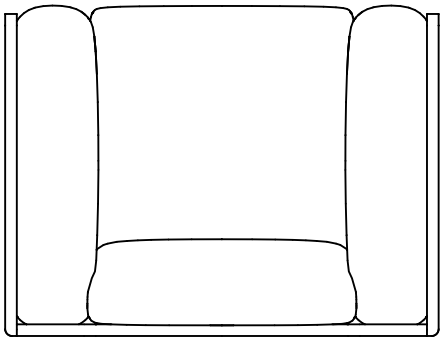

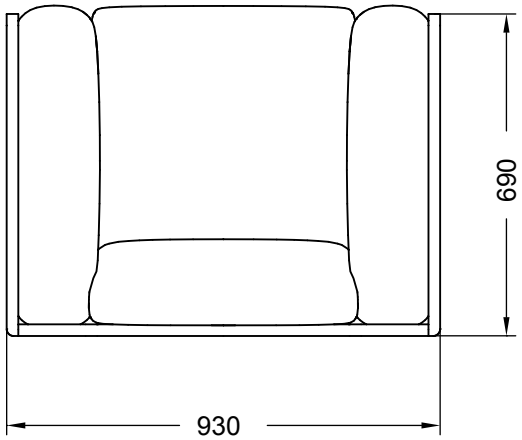
690
930